Sound Synthesis Based on Physical Models

Julius Smith
CCRMA, Stanford University

CIRMMT Distinguished Lecture
McGill University

September 16, 2010

Overview

Outline

- Early Ideas
- Physical Modeling Synthesis and Effects
- Recent Work at CCRMA

Outline

- Early Ideas
- Physical Modeling Synthesis and Effects
- Recent Work at CCRMA

Emphasis:

- Sound examples
- Block diagrams
- Historical notes

CCRMA Perspective

The Knoll, Stanford University

Early Ideas

Mathematical Origins

- Daniel Bernoulli (1733): Physical vibrations can be understood as a superposition of "simple modes" (pure sinusoidal vibrations):

$$y(t,x) = \sum_{k=0}^{\infty} A_k \sin(k\pi x/L)\cos(k\pi\nu t)$$

(displacement of length L vibrating string at time t, position x)

- D'Alembert (1747): String vibration can be understood as a pair of *traveling-waves* going in opposite directions at speed c:

$$y(t,x) = y^+\left(t - \frac{x}{c}\right) + y^-\left(t + \frac{x}{c}\right)$$

D'Alembert's Derivation

D'Alembert's derivation (1747) consisted of plugging Taylor's restoring force Ky'' for the vibrating string into Newton's law of motion "$f = ma$" to obtain the first *partial differential equation*

$$K\frac{\partial^2 y}{\partial x^2} = \epsilon\frac{\partial^2 y}{\partial t^2}$$

(in modern notation), where

$$\begin{aligned} K &= \text{string tension, and} \\ \epsilon &= \text{string mass density.} \end{aligned}$$

D'Alembert also derived the general solution as a *superposition of two traveling waves*:

$$y(t,x) = y^+\left(t - \frac{x}{c}\right) + y^-\left(t + \frac{x}{c}\right), \quad c = \sqrt{\frac{K}{\epsilon}}$$

Mathematical Paradoxes

Reasonable question of the day:

*How can a superposition of **standing waves** give you a **propagating wave**?*

$$
\begin{aligned}
y(t,x) &= \sum_{k=0}^{\infty} A_k \sin(k\pi x/L)\cos(k\pi\nu t) \\
&=? \quad y^+\left(t-\frac{x}{c}\right) + y^-\left(t+\frac{x}{c}\right)
\end{aligned}
$$

Another reasonable question of the day:

How can an infinite sum of sinusoids give an arbitrary (e.g., discontinuous) function?

Sound at the time of D'Alembert and Bernoulli

Euler, d'Alembert, and Lagrange agreed that tonal sound was a *periodic pulse train* (pulse shape noncritical)

- Musical consonance = "pulse coincidence"
- Pipe organs did a kind of "additive synthesis" by mixing *non*-sinusoidal periodic waveforms (reeds, flue pipes, etc.)
- Sums of sinusoids had *no physical meaning* in their opinion

Sound According to Bernoulli

Bernoulli, on the other hand, understood sound as a *superposition of sinusoidal motions with separate physical existence*

- D'Alembert thought this was impossible due to "intermodulation" (This remains a valid criticism of loudspeakers today)
- Helmholtz (1863) established much later that the ear was a kind of Fourier analyzer (so evolution agreed with Bernoulli)
- **Reference:** Darrigol:
  "The Acoustic Origins of Harmonic Analysis"
  Archive for History of the Exact Sciences, 2007

Sound According to Bernoulli

Bernoulli, on the other hand, understood sound as a *superposition of sinusoidal motions with separate physical existence*

- D'Alembert thought this was impossible due to "intermodulation" (This remains a valid criticism of loudspeakers today)
- Helmholtz (1863) established much later that the ear was a kind of Fourier analyzer (so evolution agreed with Bernoulli)
- **Reference:** Darrigol:
  "The Acoustic Origins of Harmonic Analysis"
  Archive for History of the Exact Sciences, 2007

Sound According to Bernoulli

Bernoulli, on the other hand, understood sound as a *superposition of sinusoidal motions with separate physical existence*

- D'Alembert thought this was impossible due to "intermodulation" (This remains a valid criticism of loudspeakers today)
- Helmholtz (1863) established much later that the ear was a kind of Fourier analyzer (so evolution agreed with Bernoulli)
- **Reference:** Darrigol:
  "The Acoustic Origins of Harmonic Analysis"
  Archive for History of the Exact Sciences, 2007

Sound According to Bernoulli

Bernoulli, on the other hand, understood sound as a *superposition of sinusoidal motions with separate physical existence*

- D'Alembert thought this was impossible due to "intermodulation" (This remains a valid criticism of loudspeakers today)
- Helmholtz (1863) established much later that the ear was a kind of Fourier analyzer (so evolution agreed with Bernoulli)
- **Reference:** Darrigol:
  "The Acoustic Origins of Harmonic Analysis"
  Archive for History of the Exact Sciences, 2007

Bernoulli's and D'Alembert's Contradictory Views

- Bernoulli saw a superposition of harmonic vibrations
- D'Alembert saw traveling waves
- We now know these are interchangeable descriptions!
  - Project initial state onto standing-wave "basis functions"
  - Standing-wave = sum of opposite-going traveling waves

Bernoulli's and D'Alembert's Contradictory Views

- Bernoulli saw a superposition of harmonic vibrations
- D'Alembert saw traveling waves
- We now know these are interchangeable descriptions!
  - Project initial state onto standing-wave "basis functions"
  - Standing-wave = sum of opposite-going traveling waves

Animations:

- [Standing waves on a string]
- [Standing wave as two traveling waves]

Digital D'Alembert Synthesis

Kelly-Lochbaum Vocal Tract Model (Discrete-Time Transmission-Line Model)

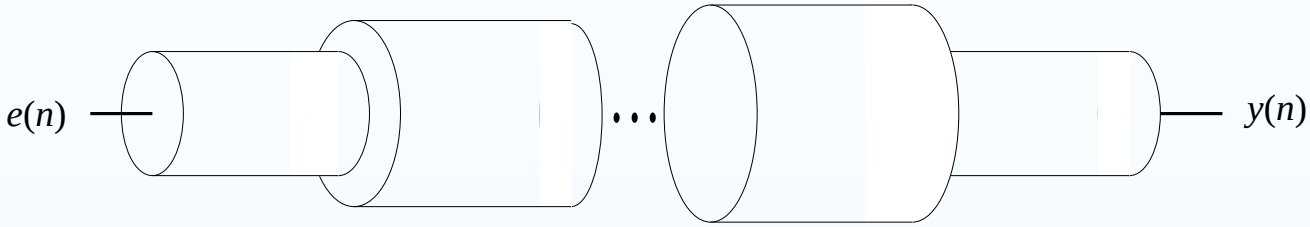

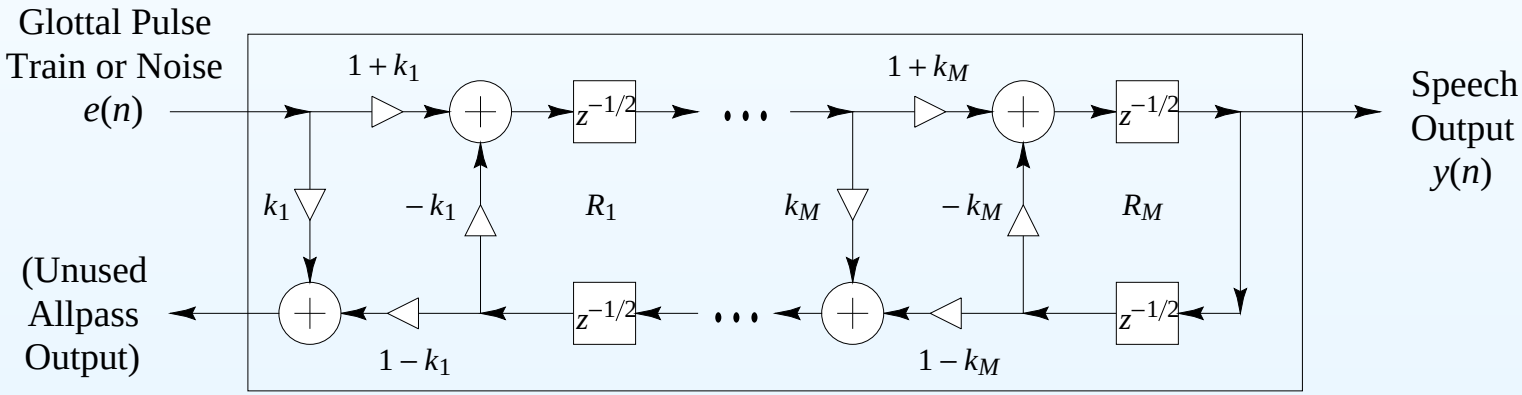

Kelly-Lochbaum Vocal Tract Model (Piecewise Cylindrical)

John L. Kelly and Carol Lochbaum (1962)

Sound Example

“Bicycle Built for Two”: (WAV) (MP3)

- Vocal part by Kelly and Lochbaum (1961)

Sound Example

“Bicycle Built for Two”: (WAV) (MP3)

- Vocal part by Kelly and Lochbaum (1961)
- Musical accompaniment by Max Mathews

Sound Example

“Bicycle Built for Two”: (WAV) (MP3)

- Vocal part by Kelly and Lochbaum (1961)
- Musical accompaniment by Max Mathews
- Computed on an IBM 704

Sound Example

“Bicycle Built for Two”: (WAV) (MP3)

- Vocal part by Kelly and Lochbaum (1961)
- Musical accompaniment by Max Mathews
- Computed on an IBM 704
- Based on Russian speech-vowel data from Gunnar Fant’s book

Sound Example

"Bicycle Built for Two": (WAV) (MP3)

- Vocal part by Kelly and Lochbaum (1961)
- Musical accompaniment by Max Mathews
- Computed on an IBM 704
- Based on Russian speech-vowel data from Gunnar Fant's book
- Probably the first digital physical-modeling synthesis sound example by any method

Sound Example

"Bicycle Built for Two": (WAV) (MP3)

- Vocal part by Kelly and Lochbaum (1961)
- Musical accompaniment by Max Mathews
- Computed on an IBM 704
- Based on Russian speech-vowel data from Gunnar Fant's book
- Probably the first digital physical-modeling synthesis sound example by any method
- Inspired Arthur C. Clarke to adapt it for "2001: A Space Odyssey" — the computer's "first song"

Digital Waveguide Models (1985)

Lossless digital waveguide $\triangleq$ *bidirectional delay line*

at some *wave impedance* R

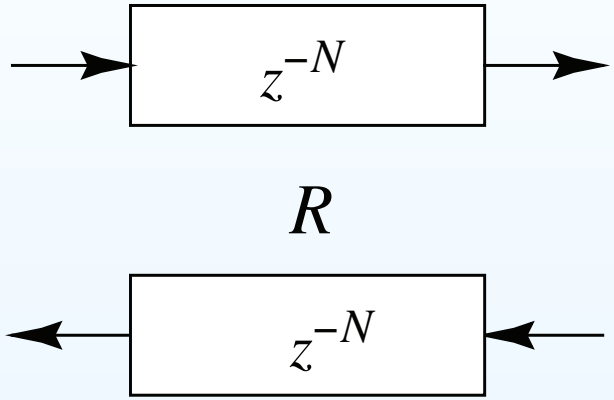

Useful for *efficient* models of

- strings
- bores
- plane waves
- conical waves

Signal Scattering

Signal *scattering* is caused by a *change* in wave impedance R:

$$k_1 = \frac{R_2 - R_1}{R_2 + R_1}$$

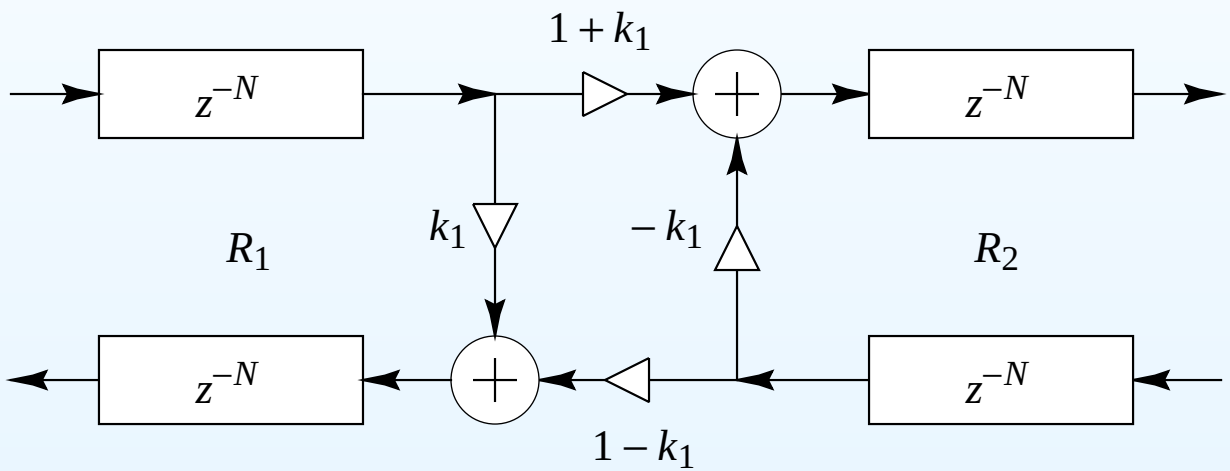

If the wave impedance changes *every spatial sample*, the Kelly-Lochbaum vocal-tract model results (also need reflecting terminations)

Ideal Plucked String (Displacement Waves)

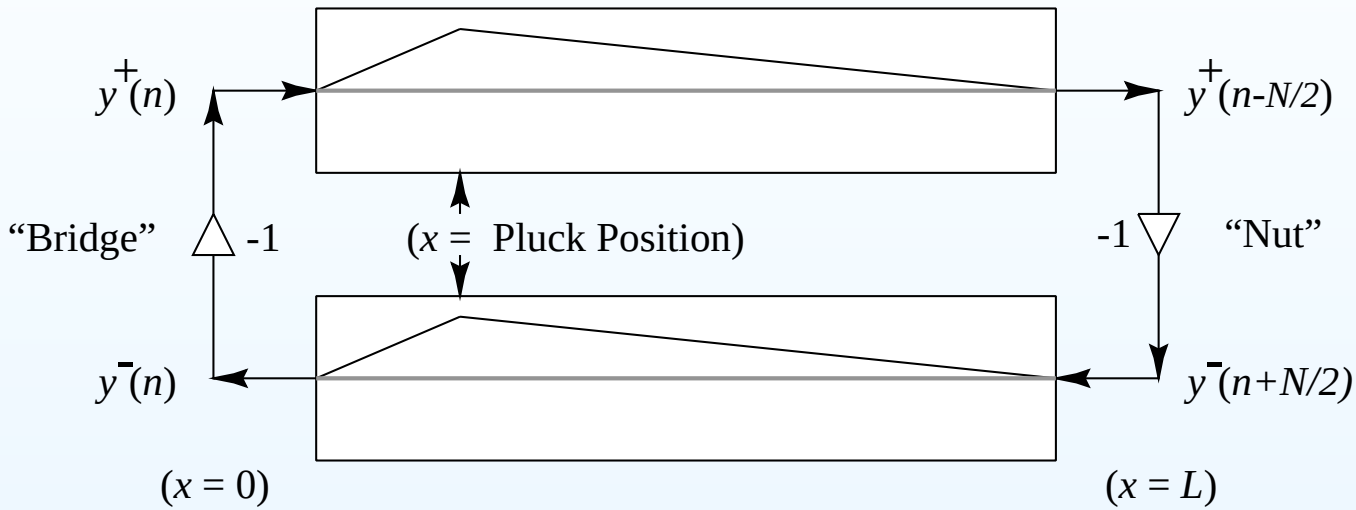

- Load each delay line with *half* of initial string displacement
- Sum of upper and lower delay lines = string displacement

Ideal Struck String (Velocity Waves)

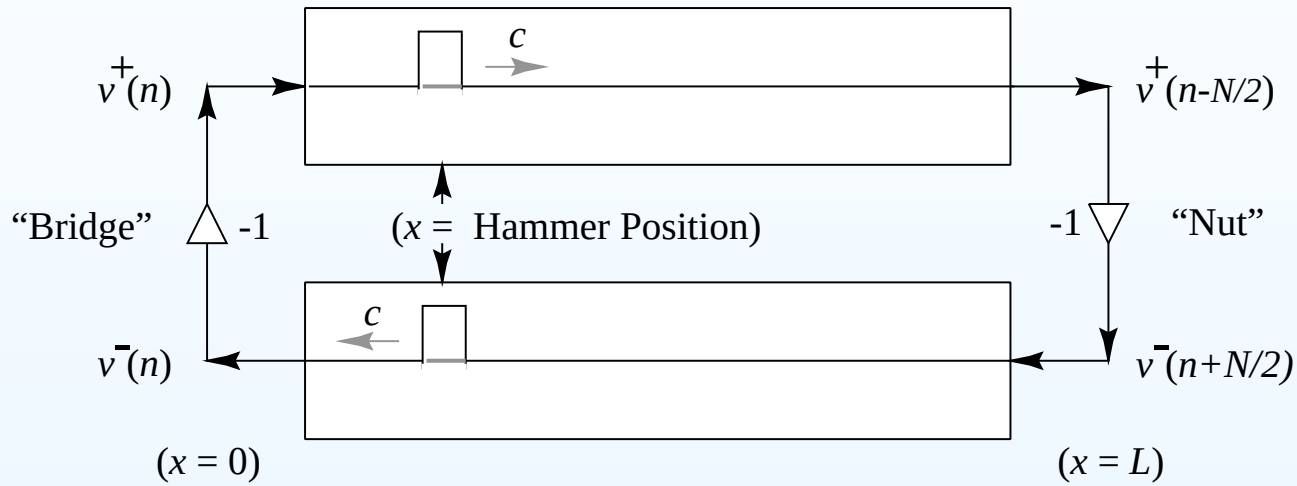

Hammer strike = *momentum transfer* = velocity step:

$$m_h v_h(0-) = (m_h + m_s) v_s(0+)$$

Karplus-Strong (KS) Algorithm (1983)

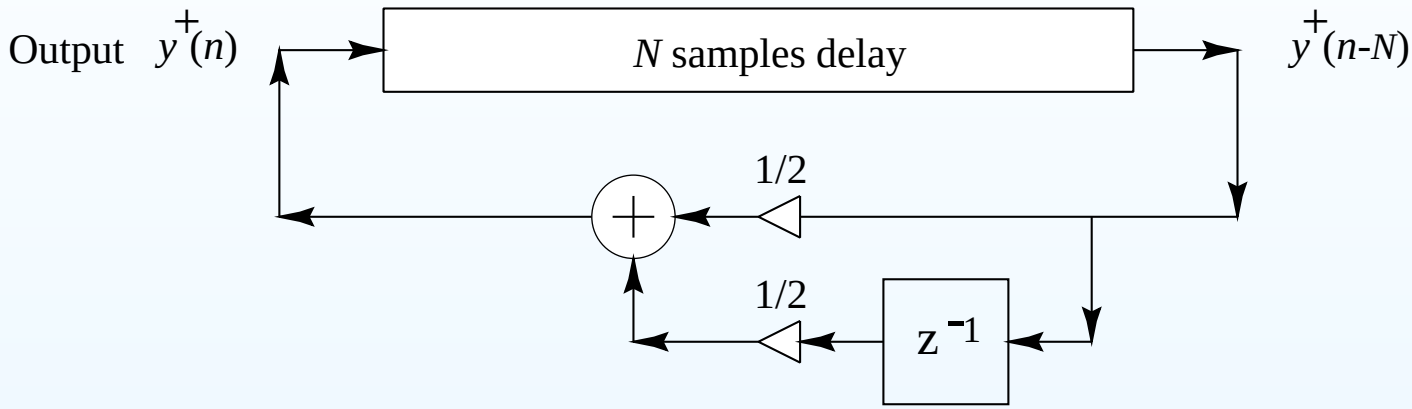

- Discovered (1978) as “self-modifying wavetable synthesis”
- Wavetable is preferably initialized with random numbers

Karplus-Strong (KS) Algorithm (1983)

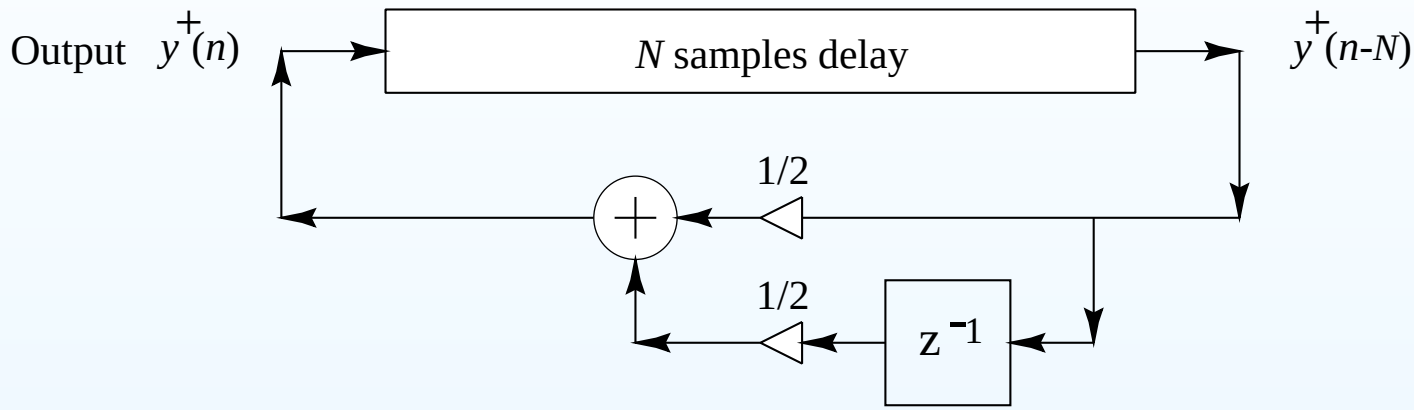

- Discovered (1978) as “self-modifying wavetable synthesis”
- Wavetable is preferably initialized with random numbers

EKS Algorithm (Jaffe-Smith 1983)

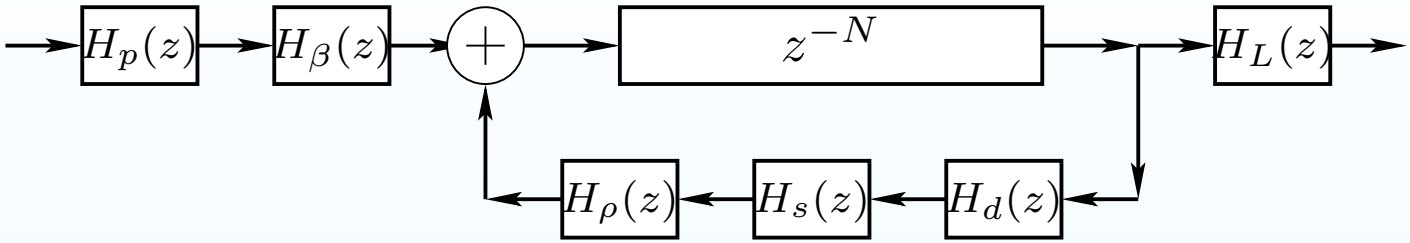

$$N = \text{pitch period } (2\times \text{ string length}) \text{ in samples}$$

$$H_p(z) = \frac{1-p}{1-p\,z^{-1}} = \text{pick-direction lowpass filter}$$

$$H_\beta(z) = 1 - z^{-\beta N} = \text{pick-position comb filter, } \beta \in (0,1)$$

$$H_d(z) = \text{string-damping filter (one/two poles/zeros typical)}$$

$$H_s(z) = \text{string-stiffness allpass filter (several poles and zeros)}$$

$$H_\rho(z) = \frac{\rho(N) - z^{-1}}{1-\rho(N)\,z^{-1}} = \text{first-order string-tuning allpass filter}$$

$$H_L(z) = \frac{1-R_L}{1-R_L\,z^{-1}} = \text{dynamic-level lowpass filter}$$

EKS Sound Examples

Plucked String: (WAV) (MP3)

- Plucked String 1: (WAV) (MP3)
- Plucked String 2: (WAV) (MP3)
- Plucked String 3: (WAV) (MP3)

(Computed using `Plucked.cpp` in the C++ Synthesis Tool Kit (STK) by Perry Cook and Gary Scavone)

EKS Sound Example (1988)

Bach A-Minor Concerto—Orchestra Part: (WAV) (MP3)

- Executed in real time on one Motorola DSP56001 (20 MHz clock, 128K SRAM)

EKS Sound Example (1988)

Bach A-Minor Concerto—Orchestra Part: (WAV) (MP3)

- Executed in real time on one Motorola DSP56001 (20 MHz clock, 128K SRAM)
- Developed for the NeXT Computer introduction at Davies Symphony Hall, San Francisco, 1988

EKS Sound Example (1988)

Bach A-Minor Concerto—Orchestra Part: (WAV) (MP3)

- Executed in real time on one Motorola DSP56001 (20 MHz clock, 128K SRAM)
- Developed for the NeXT Computer introduction at Davies Symphony Hall, San Francisco, 1988
- Solo violin part was played live by Dan Kobialka of the San Francisco Symphony

Digital Waveguide Single Reed, Cylindrical Bore Model (1986)

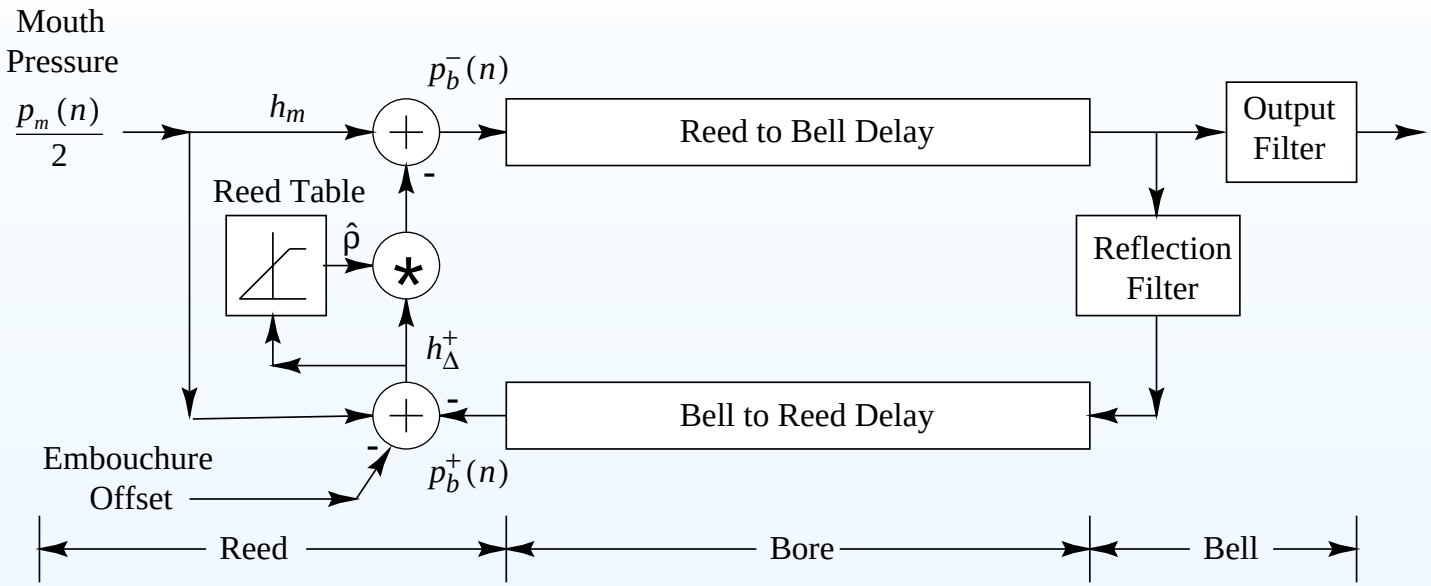

Digital waveguide clarinet

- Control variable = mouth half-pressure
- Total reed cost = two subtractions, one multiply, and one table lookup per sample

Digital Waveguide Single Reed, Cylindrical Bore Model (1986)

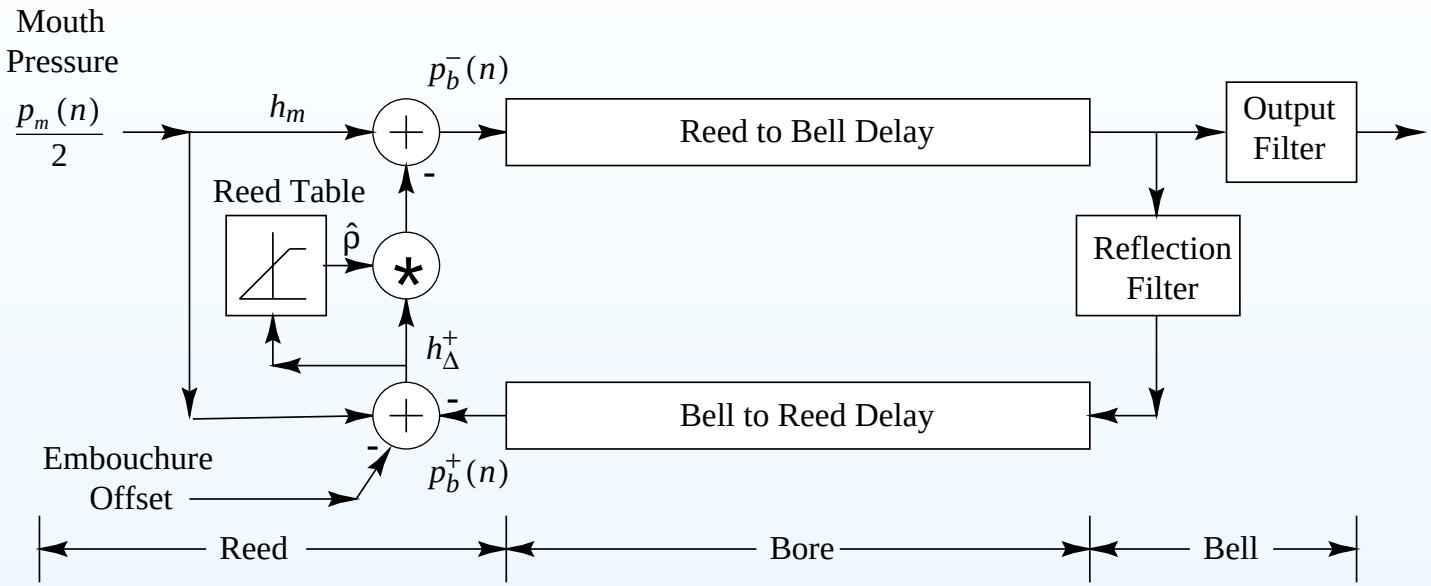

Digital waveguide clarinet

- Control variable = mouth half-pressure
- Total reed cost = two subtractions, one multiply, and one table lookup per sample

Digital Waveguide Single Reed, Cylindrical Bore Model (1986)

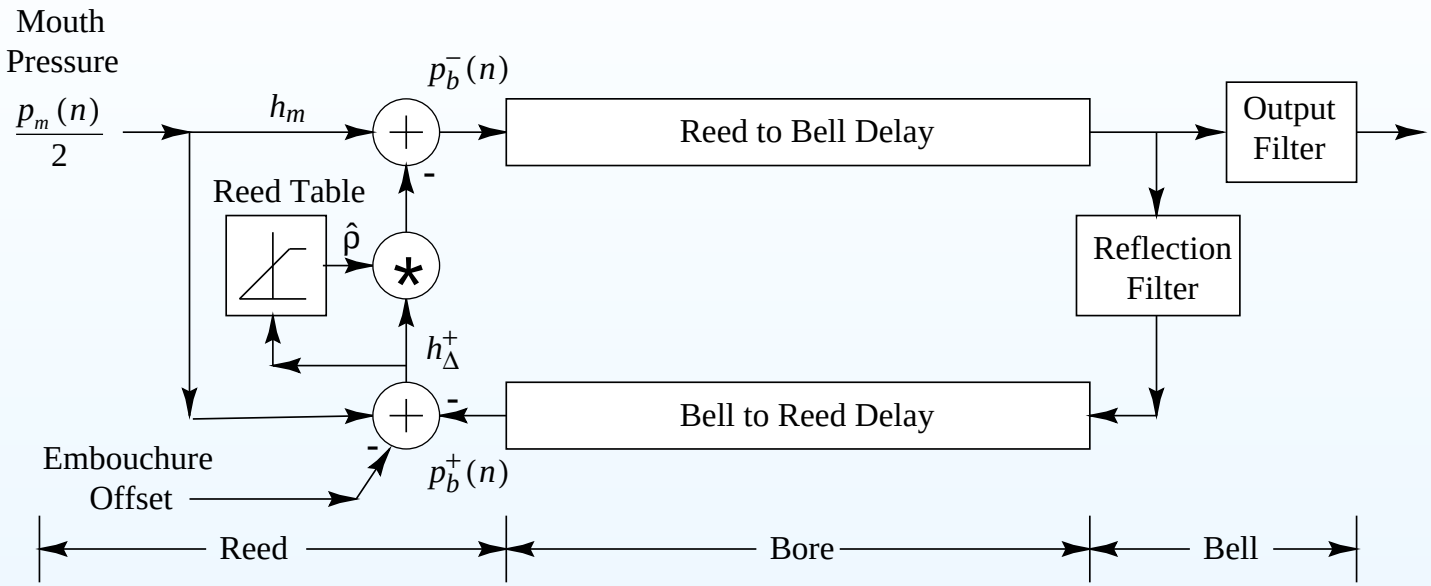

Digital waveguide clarinet

- Control variable = mouth half-pressure
- Total reed cost = two subtractions, one multiply, and one table lookup per sample

Digital Waveguide Wind Instrument Sound Examples

- STK Clarinet: (WAV) (MP3)
  `Google` search: *STK clarinet*
- See also Faust-STK Clarinet (new)
- Staccato Systems Slide Flute
  (based on STK flute, ca. 1995): (WAV) (MP3)
- Yamaha VL1 “Virtual Lead” synthesizer demos (1994):
  - Shakuhachi: (WAV) (MP3)
  - Oboe and Bassoon: (WAV) (MP3)
  - Tenor Saxophone: (WAV) (MP3)

Digital Waveguide Wind Instrument Sound Examples

- STK Clarinet: (WAV) (MP3)
  `Google` search: *STK clarinet*
- See also Faust-STK Clarinet (new)
- Staccato Systems Slide Flute
  (based on STK flute, ca. 1995): (WAV) (MP3)
- Yamaha VL1 “Virtual Lead” synthesizer demos (1994):
  - Shakuhachi: (WAV) (MP3)
  - Oboe and Bassoon: (WAV) (MP3)
  - Tenor Saxophone: (WAV) (MP3)

Digital Waveguide Wind Instrument Sound Examples

- STK Clarinet: (WAV) (MP3)
  `Google` search: *STK clarinet*
- See also Faust-STK Clarinet (new)
- Staccato Systems Slide Flute
  (based on STK flute, ca. 1995): (WAV) (MP3)
- Yamaha VL1 “Virtual Lead” synthesizer demos (1994):
  - Shakuhachi: (WAV) (MP3)
  - Oboe and Bassoon: (WAV) (MP3)
  - Tenor Saxophone: (WAV) (MP3)

Digital Waveguide Bowed Strings (1986)

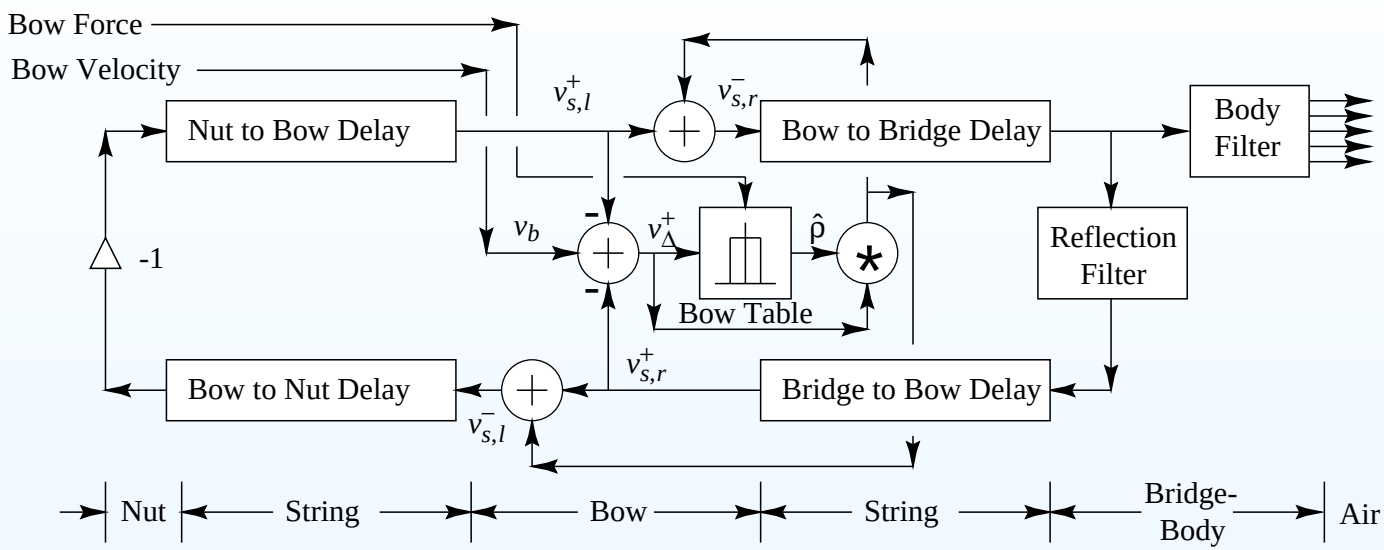

- Reflection filter summarizes all losses per period (due to bridge, bow, finger, etc.)
- Bow-string junction = *memoryless* lookup table (or segmented polynomial)

Digital Waveguide Bowed Strings (1986)

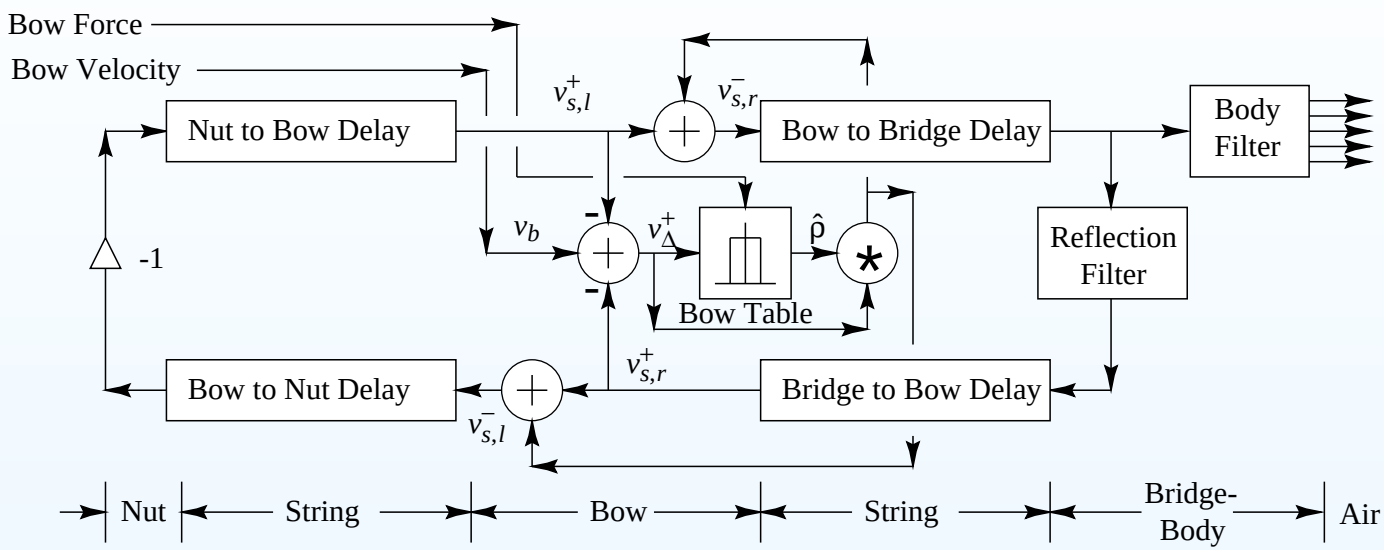

- Reflection filter summarizes all losses per period (due to bridge, bow, finger, etc.)
- Bow-string junction = *memoryless* lookup table (or segmented polynomial)

Digital Waveguide Bowed Strings (1986)

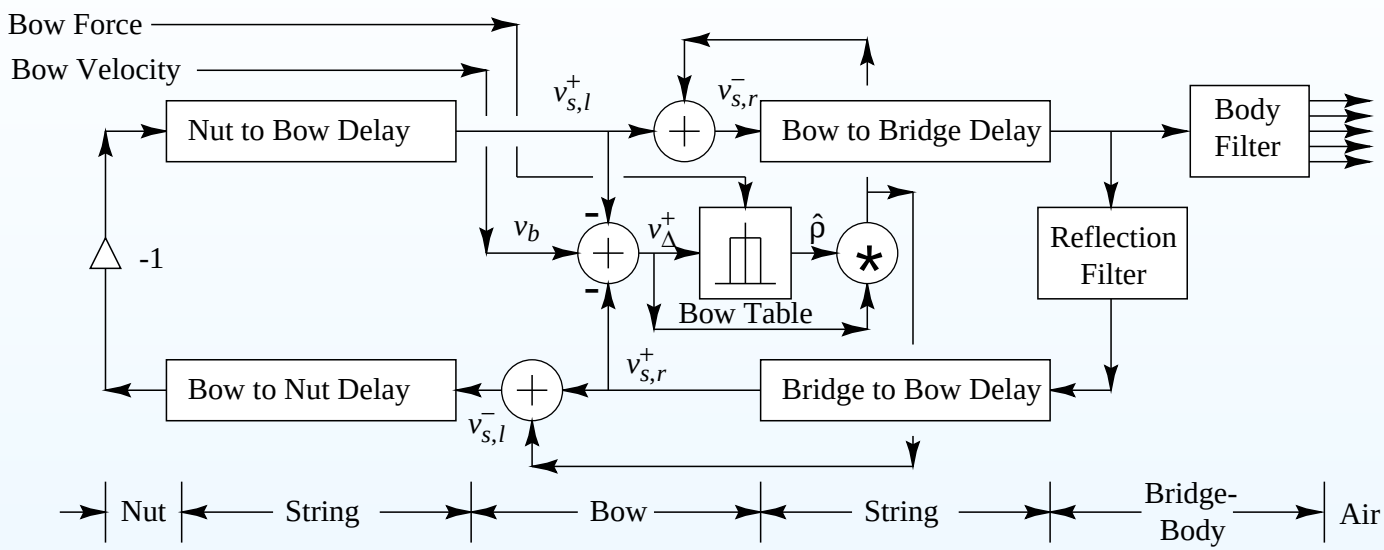

- Reflection filter summarizes all losses per period (due to bridge, bow, finger, etc.)
- Bow-string junction = *memoryless* lookup table (or segmented polynomial)

Amplifier Distortion + Amplifier Feedback

Sullivan 1990

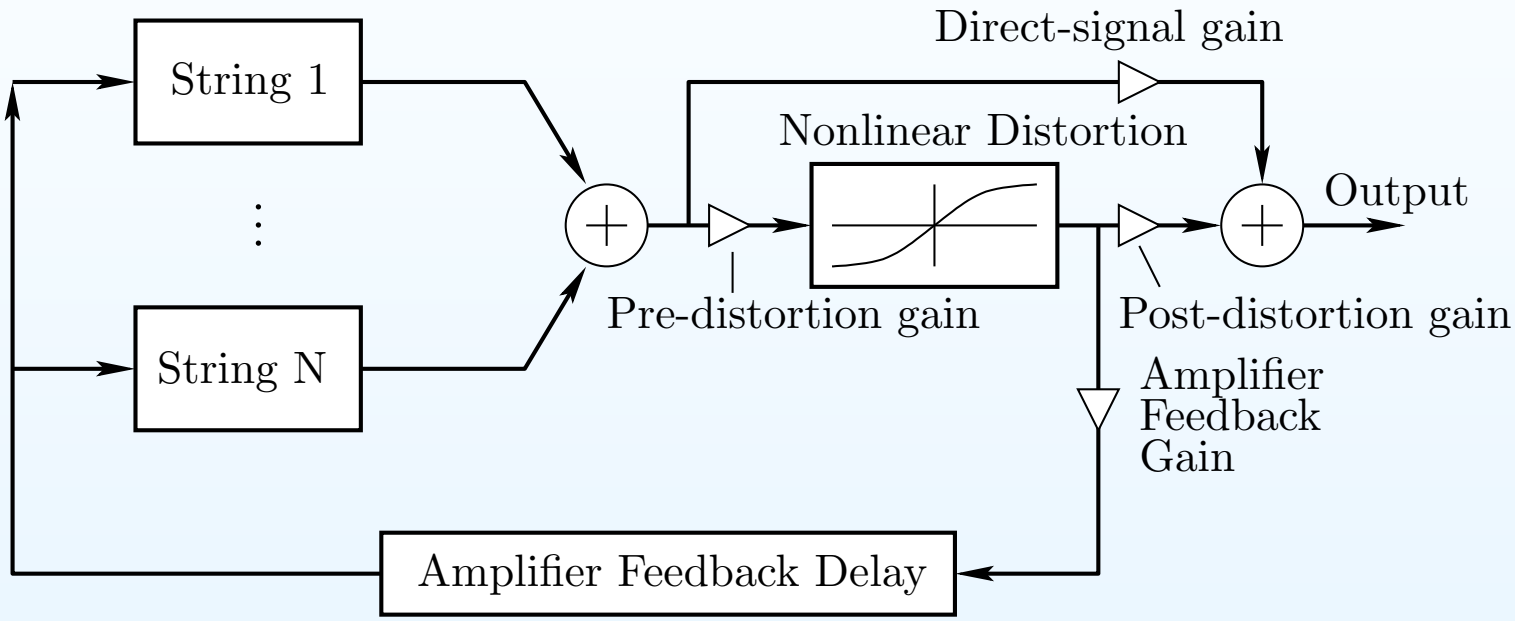

Distortion output signal often further filtered by an *amplifier cabinet filter*, representing speaker cabinet, driver responses, etc.

Distortion Guitar Sound Examples

(Stanford Sondius Project, ca. 1995)

- Distortion Guitar: (WAV) (MP3)
- Amplifier Feedback 1: (WAV) (MP3)
- Amplifier Feedback 2: (WAV) (MP3)

Commuted Synthesis of Acoustic Strings (1993)

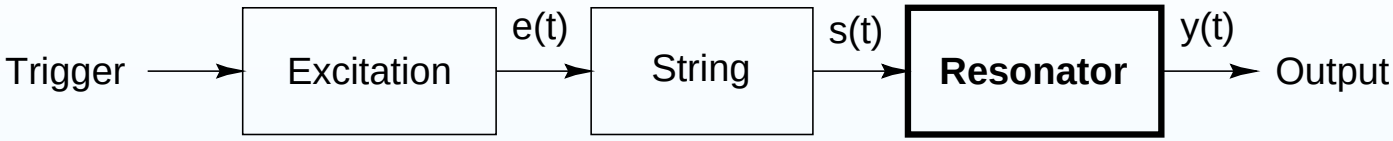

Schematic diagram of a stringed musical instrument.

Commuted Synthesis of Acoustic Strings (1993)

Schematic diagram of a stringed musical instrument.

Equivalent diagram in the linear, time-invariant case.

Commuted Synthesis of Acoustic Strings (1993)

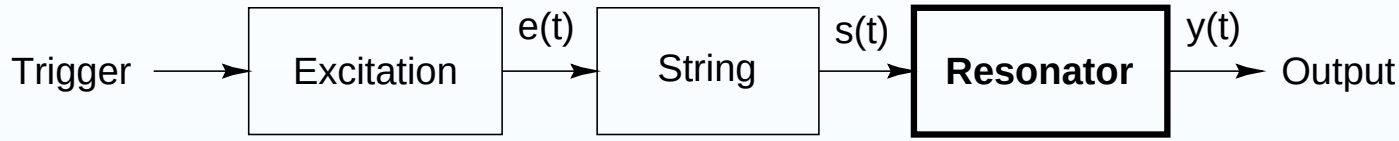

Schematic diagram of a stringed musical instrument.

Equivalent diagram in the linear, time-invariant case.

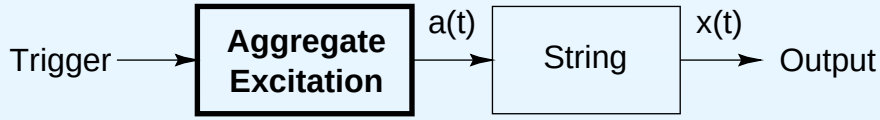

Use of an aggregate excitation given by the convolution of original excitation with the resonator impulse response.

Commuted Components

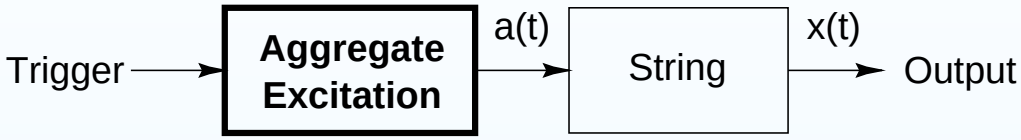

“Plucked Resonator” driving a String.

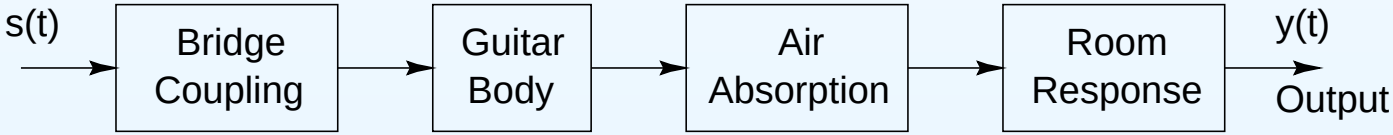

Possible components of a guitar resonator.

Sound Examples

Electric Guitar (Pick-Ups and/or Body-Model Added) (Stanford Sondius Project → Staccato Systems, Inc. → ADI, ca. 1995)

- Example 1: (WAV) (MP3)
- Example 2: (WAV) (MP3)
- Example 3: (WAV) (MP3)
- Virtual “wah-wah pedal”: (WAV) (MP3)

Sound Examples

Electric Guitar (Pick-Ups and/or Body-Model Added) (Stanford Sondius Project → Staccato Systems, Inc. → ADI, ca. 1995)

- Example 1: (WAV) (MP3)
- Example 2: (WAV) (MP3)
- Example 3: (WAV) (MP3)
- Virtual “wah-wah pedal”: (WAV) (MP3)

STK Mandolin

- STK Mandolin 1: (WAV) (MP3)
- STK Mandolin 2: (WAV) (MP3)

Sound Examples

More Recent Acoustic Guitar

- Bach Prelude in E Major: (WAV) (MP3)
- Bach Loure in E Major: (WAV) (MP3)
- More examples
- Yet more examples

Virtual performance by Dr. Mikael Laurson, Sibelius Institute

Sound Examples

More Recent Acoustic Guitar

- Bach Prelude in E Major: (WAV) (MP3)
- Bach Loure in E Major: (WAV) (MP3)
- More examples
- Yet more examples

Virtual performance by Dr. Mikael Laurson, Sibelius Institute

Virtual guitar by Helsinki Univ. of Tech., Acoustics Lab[1]

[1] http://www.acoustics.hut.fi/

Commuted Synthesis of Linearized Violin

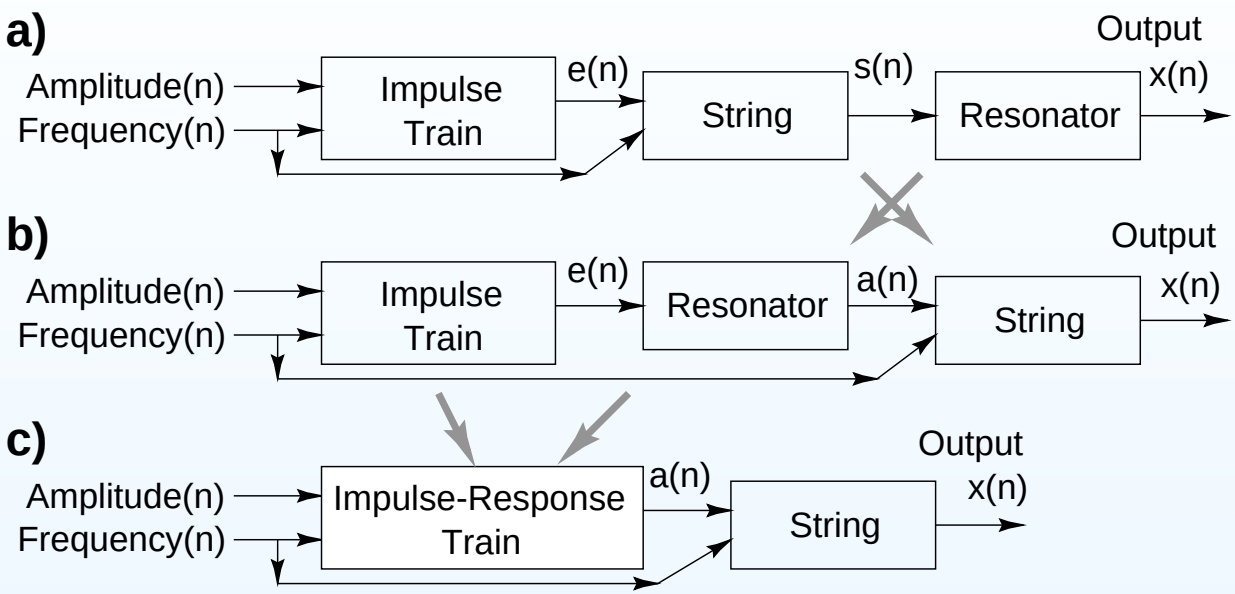

- Assumes *ideal Helmholtz motion* of string
- Sound Examples (Stanford Sondius project, ca. 1995):
  - Bass: (WAV) (MP3)
  - Cello: (WAV) (MP3)
  - Viola 1: (WAV) (MP3)
  - Viola 2: (WAV) (MP3)
  - Violin 1: (WAV) (MP3)
  - Violin 2: (WAV) (MP3)
  - Duet: (WAV) (MP3)

Commuted Synthesis of Linearized Violin

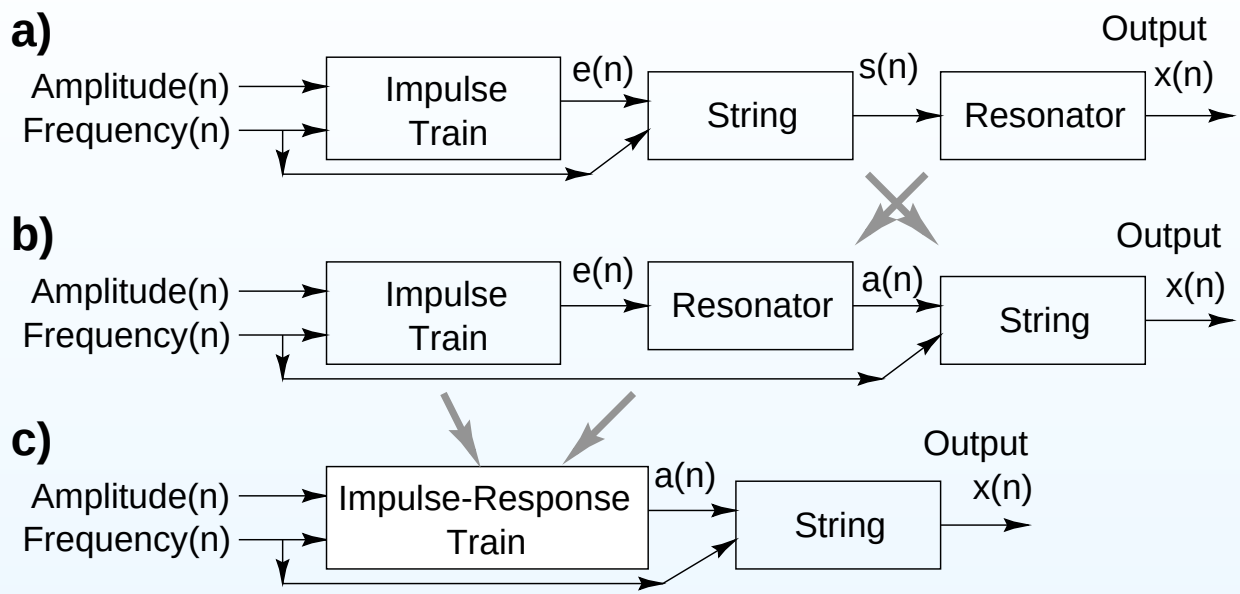

- Assumes *ideal Helmholtz motion* of string
- Sound Examples (Stanford Sondius project, ca. 1995):
  - Bass: (WAV) (MP3)
  - Cello: (WAV) (MP3)
  - Viola 1: (WAV) (MP3)
  - Viola 2: (WAV) (MP3)
  - Violin 1: (WAV) (MP3)
  - Violin 2: (WAV) (MP3)
  - Duet: (WAV) (MP3)

Commuted Synthesis of Linearized Violin

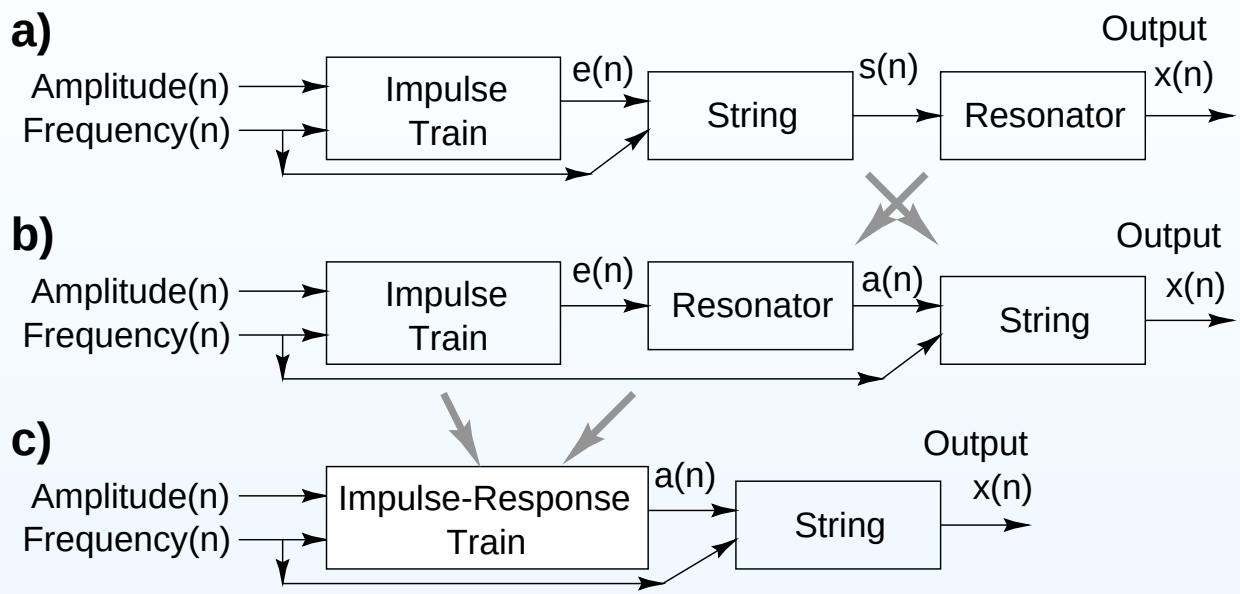

- Assumes *ideal Helmholtz motion* of string
- Sound Examples (Stanford Sondius project, ca. 1995):
  - Bass: (WAV) (MP3)
  - Cello: (WAV) (MP3)
  - Viola 1: (WAV) (MP3)
  - Viola 2: (WAV) (MP3)
  - Violin 1: (WAV) (MP3)
  - Violin 2: (WAV) (MP3)
  - Duet: (WAV) (MP3)

Commuted Piano Synthesis (1995)

Hammer-string interaction pulses (force):

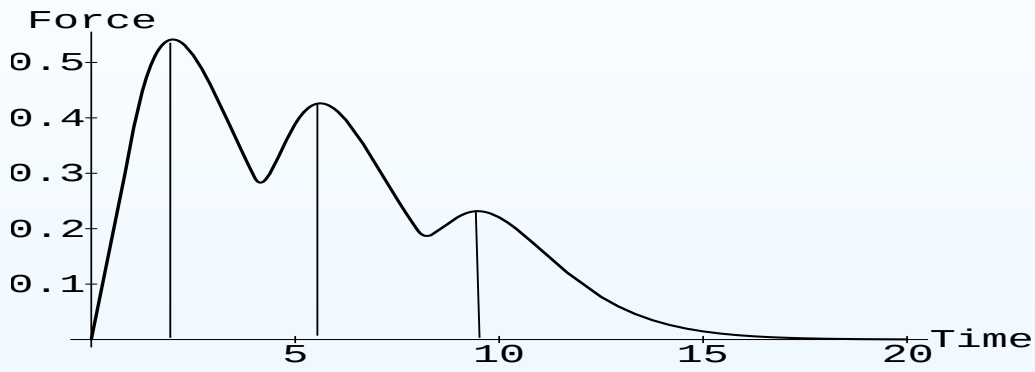

Synthesis of Hammer-String Interaction Pulse

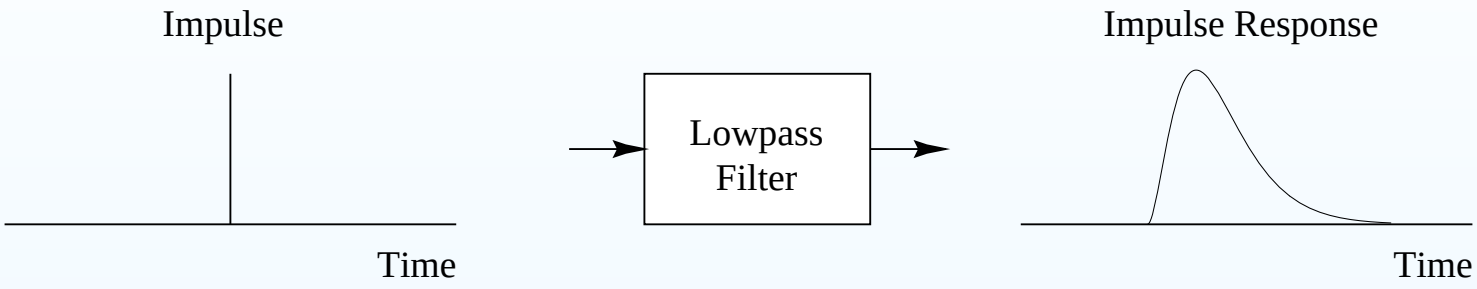

- Faster collisions correspond to *narrower* pulses (*nonlinear filter*)
- For a *given velocity*, filter is linear time-invariant
- Piano is “linearized” for each hammer velocity

Synthesis of Hammer-String Interaction Pulse

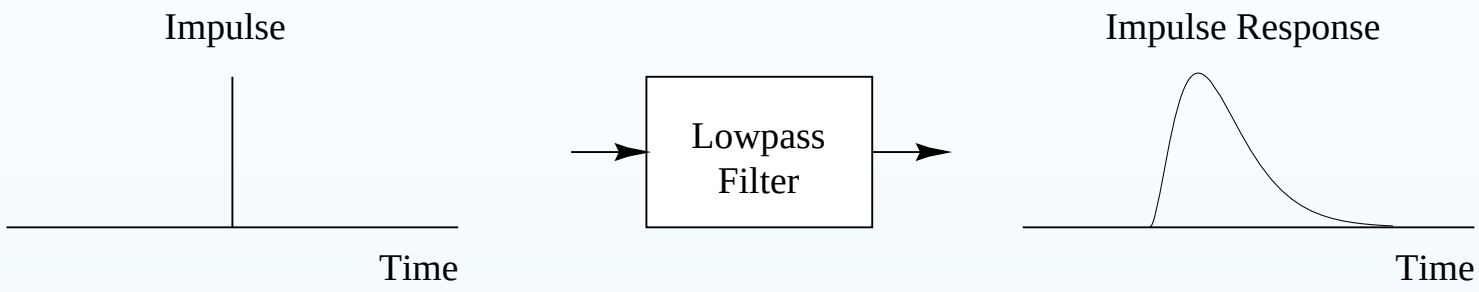

- Faster collisions correspond to *narrower* pulses (*nonlinear filter*)
- For a *given velocity*, filter is linear time-invariant
- Piano is “linearized” for each hammer velocity

Synthesis of Hammer-String Interaction Pulse

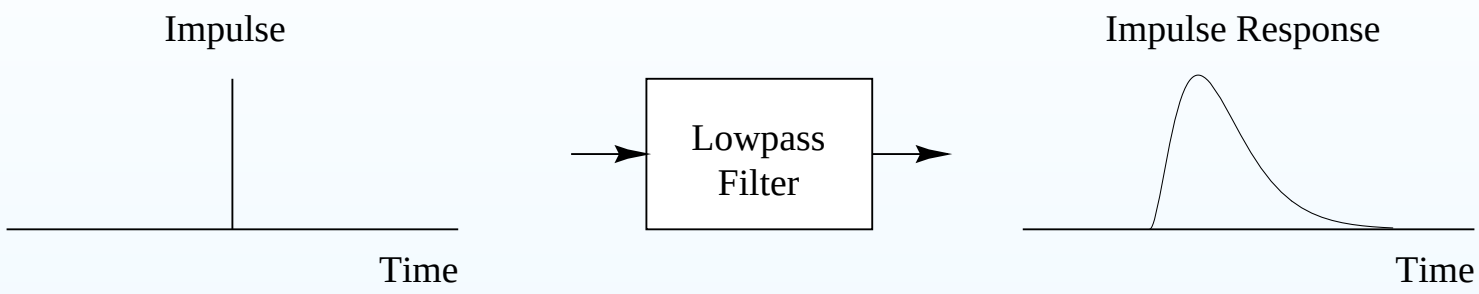

- Faster collisions correspond to *narrower* pulses (*nonlinear filter*)
- For a *given velocity*, filter is linear time-invariant
- Piano is “linearized” for each hammer velocity

Synthesis of Hammer-String Interaction Pulse

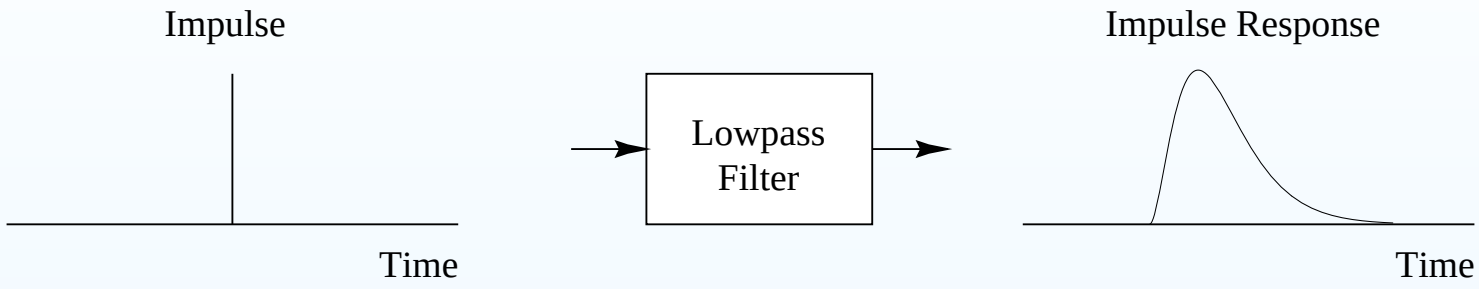

- Faster collisions correspond to *narrower* pulses (*nonlinear filter*)
- For a *given velocity*, filter is linear time-invariant
- Piano is “linearized” for each hammer velocity

Multiple Hammer-String Interaction Pulses

Superimpose several individual pulses:

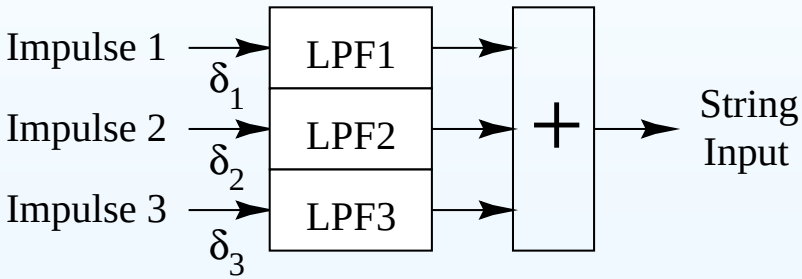

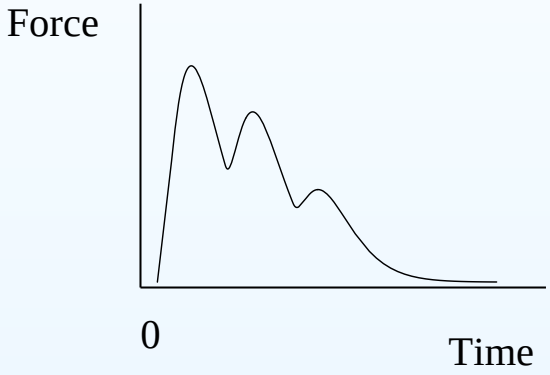

Multiple Hammer-String Interaction Pulses

Superimpose several individual pulses:

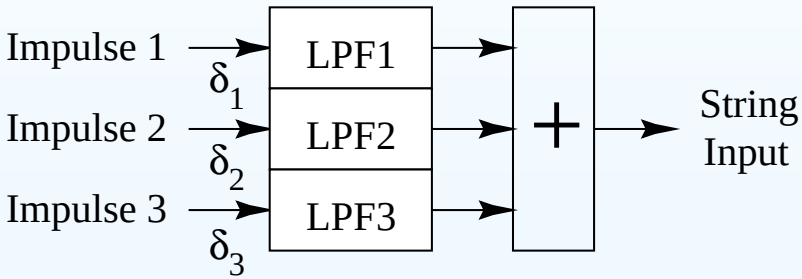

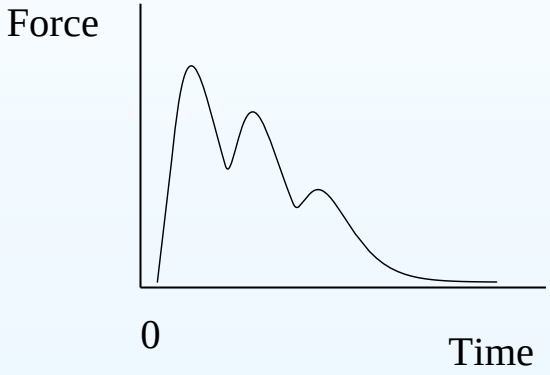

As impulse amplitude grows (faster hammer strike), output pulses become *taller and thinner*, showing less overlap.

Complete Piano Model

Natural Ordering:

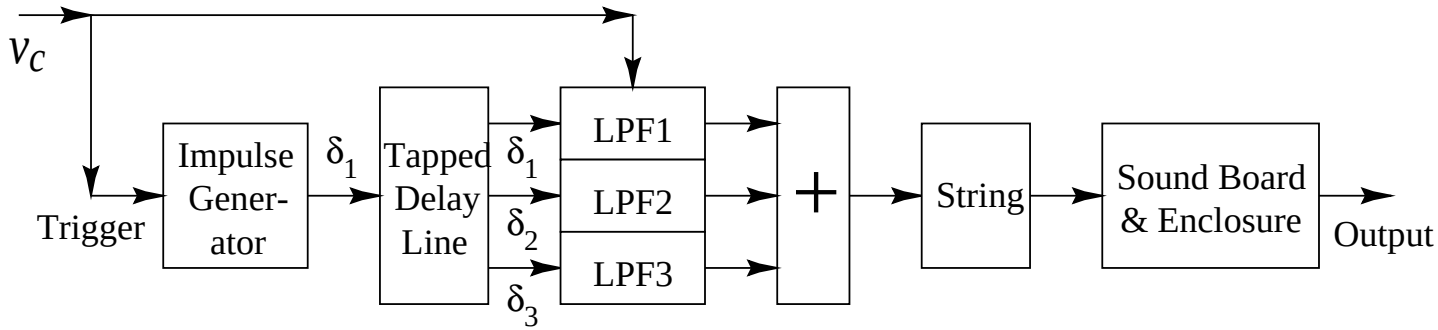

Complete Piano Model

Natural Ordering:

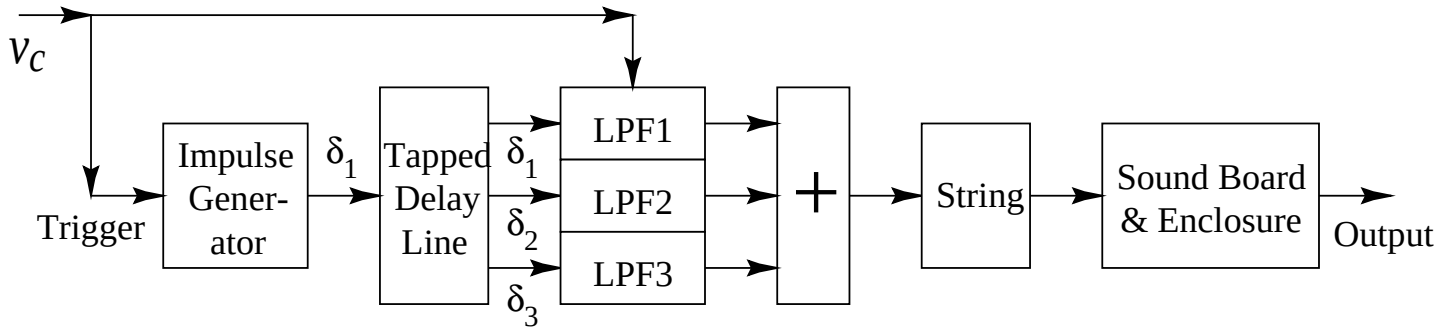

Commuted Ordering:

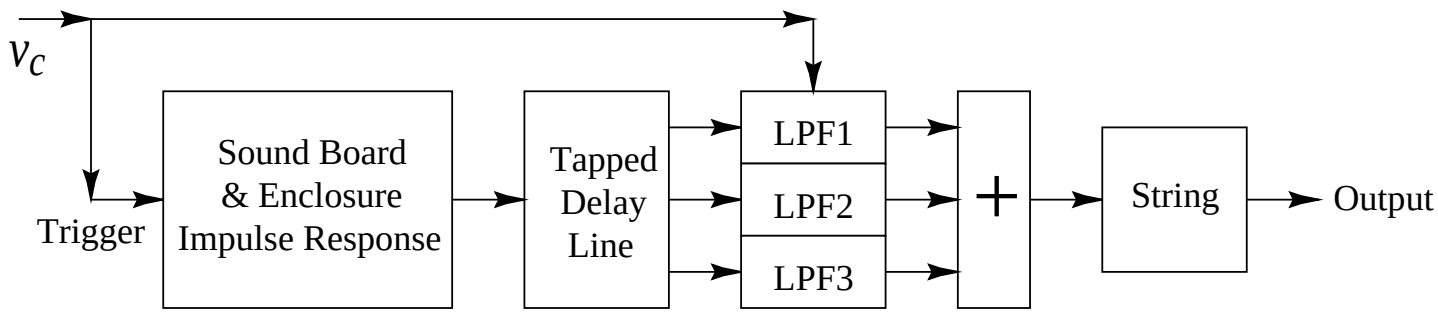

Complete Piano Model

Natural Ordering:

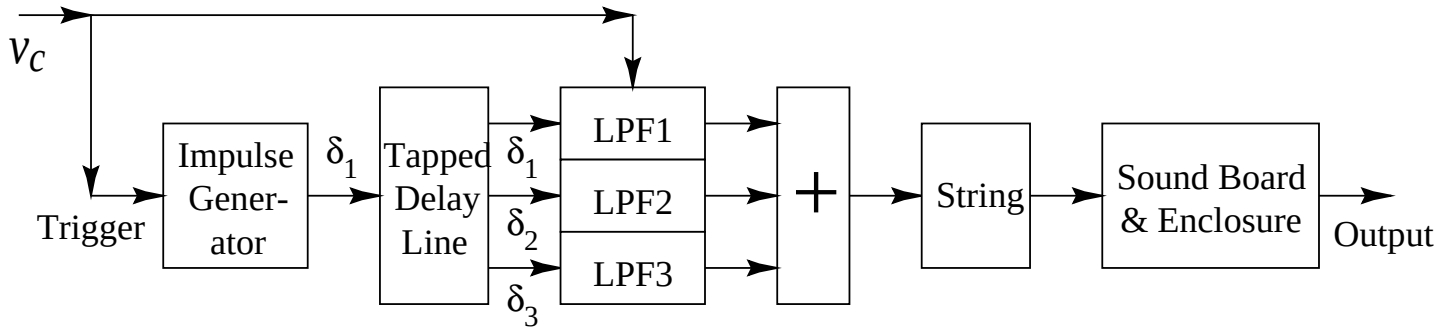

Commuted Ordering:

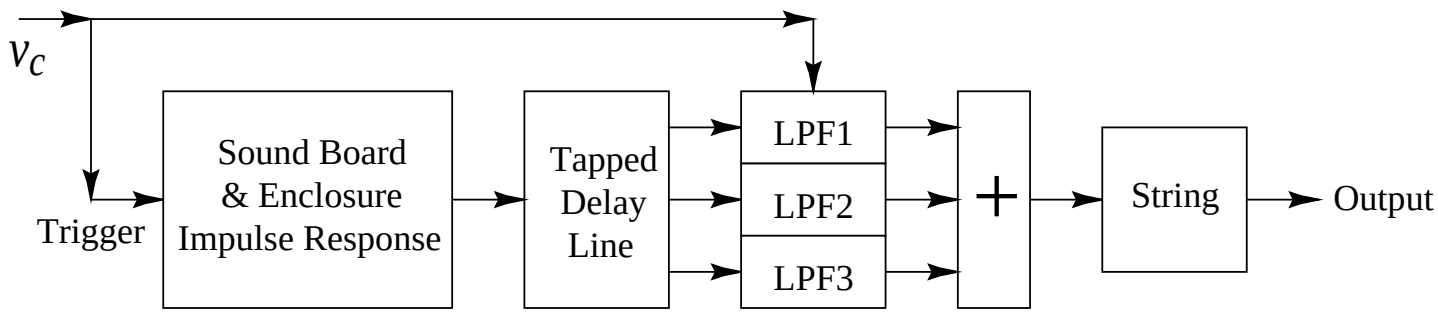

- Soundboard and enclosure are *commuted*

Complete Piano Model

Natural Ordering:

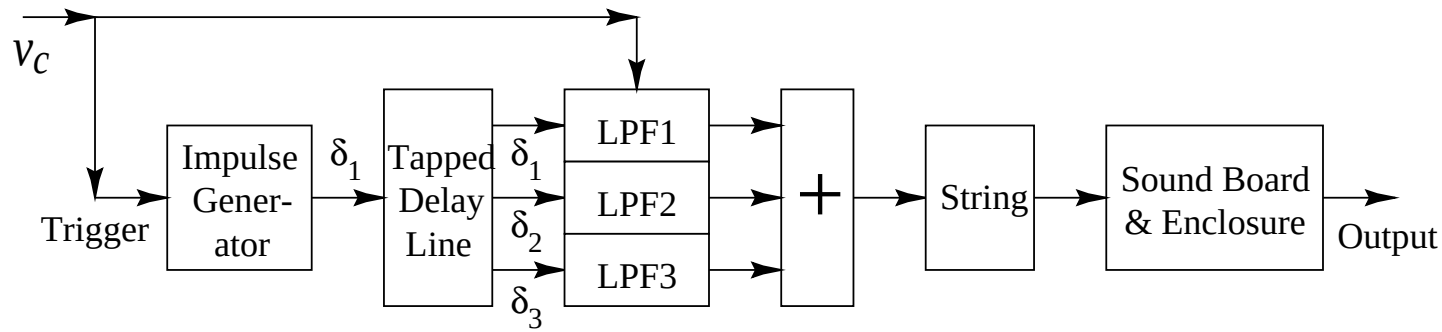

Commuted Ordering:

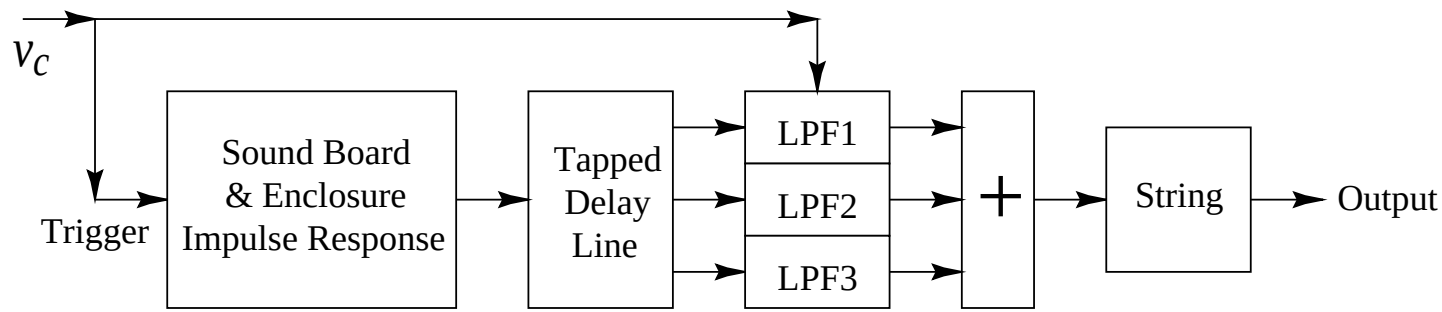

- Soundboard and enclosure are *commuted*
- Only need a stored recording of their *impulse response*

Complete Piano Model

Natural Ordering:

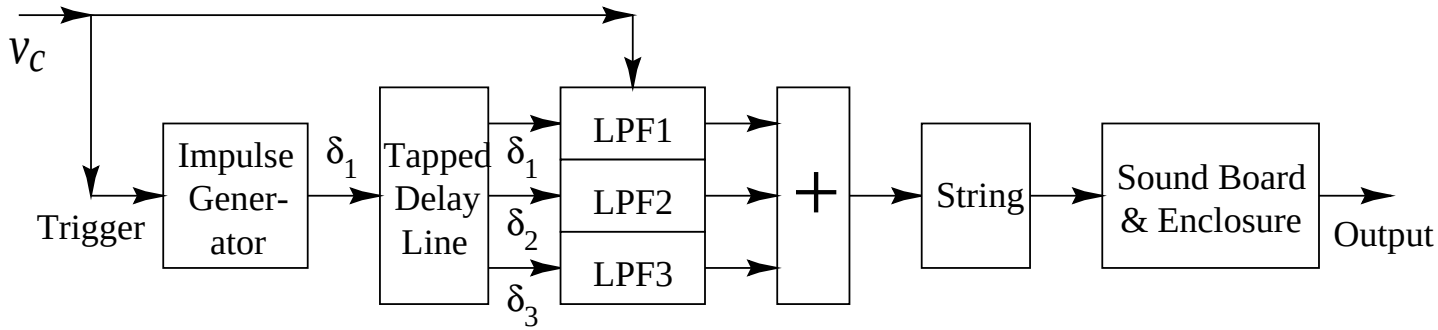

Commuted Ordering:

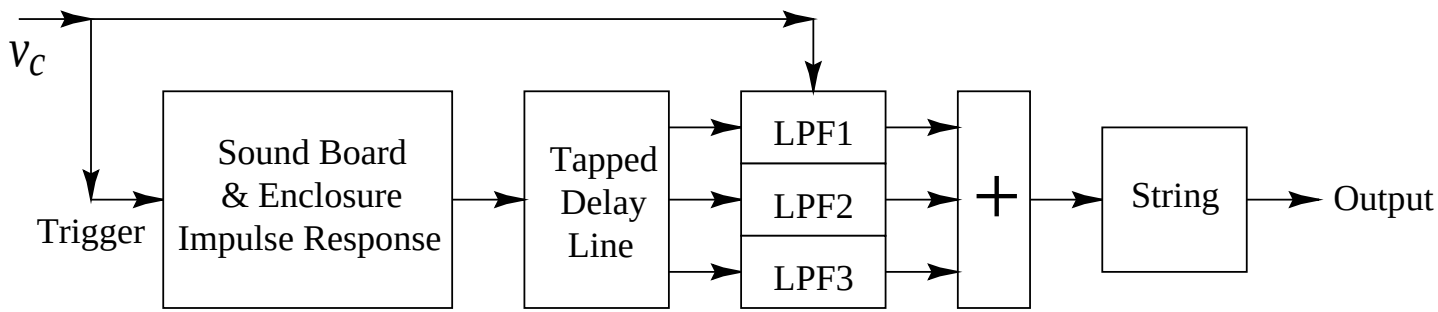

- Soundboard and enclosure are *commuted*
- Only need a stored recording of their *impulse response*
- An enormous digital filter is otherwise required

Piano and Harpsichord Sound Examples

(Stanford Sondius Project, ca. 1995)

- Piano: (WAV) (MP3)
- Harpsichord 1: (WAV) (MP3)
- Harpsichord 2: (WAV) (MP3)

More Recent Harpsichord Example

- Harpsichord Soundboard Hammer-Response: (WAV) (MP3)
- Musical Commuted Harpsichord Example: (WAV) (MP3)
- More examples

References:

- “Sound Synthesis of the Harpsichord Using a Computationally Efficient Physical Model”,
- by Vesa Välimäki, Henri Penttinen, Jonte Knif, Mikael Laurson, and Cumhur Erkut, JASP-2004
- Forthcoming dissertation by *Jack Perng* (Stanford, Physics/CCRMA)
-

Recent CCRMA Research related to Virtual Musical Instruments

Recent Research on Virtual Musical Instruments at CCRMA

CCRMA building: The Knoll, Stanford University

Outline

- Virtual Acoustic Guitar — Nelson Lee (Computer Science PhD student)
- Haptic Virtual Instruments — Ed Berdahl (Electrical Engineering PhD student)
- Virtual Harpsichord — Jack Perng (Physics PhD student)
- Acoustic Space Modeling — Consulting Professor Jonathan Abel, Music PhD student Nick Bryan, EE graduate student Travis Skare, and others
- IEEE-ASLP Special Issue on Virtual Analog Audio Effects & Musical Instruments, edited by Välimäki, Fontana, Zölzer, & Smith
- Software Tools in the Faust Language, with Plans for STK Extensions

Virtual Acoustic Guitar Models

Coupled Strings Analysis and Synthesis

Submitted paper based on recent CCRMA/CS thesis by **Nelson Lee**:

"Analysis and Synthesis of Coupled Vibrating Strings Using a Hybrid Modal-Waveguide Synthesis Model"

by Nelson Lee, Julius Smith, and Vesa Välimäki.
Accepted for publication in the IEEE special issue on Virtual Analog Audio Effects and Musical Instruments, May 2010 (est.)

Nelson Lee String Model Overview

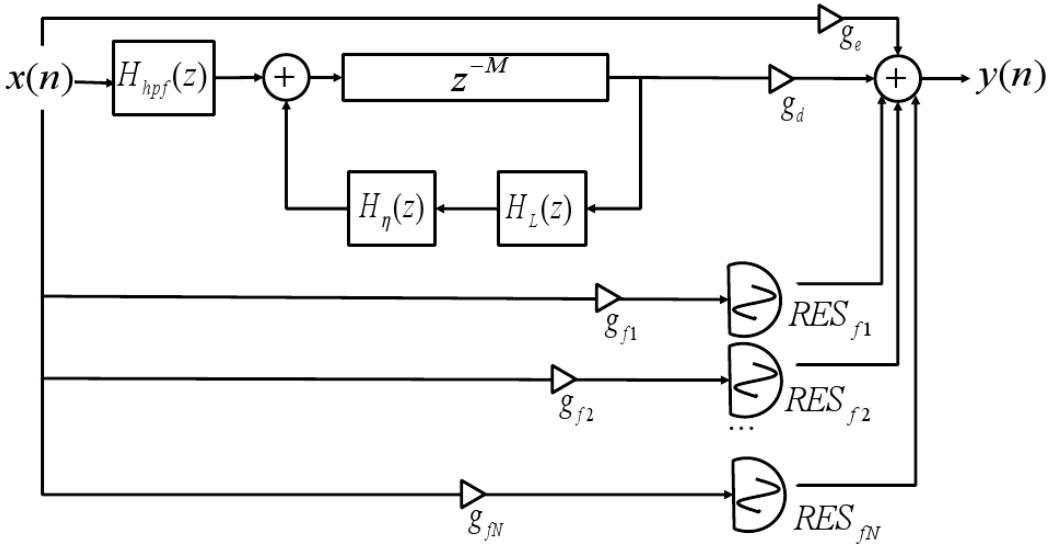

- String excitation (for commuted waveguide synthesis) is *highpass filtered* to avoid exciting first N partials
- Lowest N partials are *replaced* by fourth-order resonators (which can independently beat and give two-stage decay)
- Similar to Balázs Bank formulation which *adds* second-order resonators to existing partials of the filtered-delay-loop
- New analysis methods (in thesis) for estimating partial parameters, as well as other results

Sound Examples of Individual Effects

From Nelson Lee's thesis defense:

- Original waveform: (WAV) (MP3)
- Simple lossless, reflectively terminated digital waveguide (DWG): (WAV) (MP3)
- Add loop filter: (WAV) (MP3)
- Add interpolation filter: (WAV) (MP3)
- Add excitation (ICMC07): (WAV) (MP3)
- Add body response: (WAV) (MP3)
- Add hybrid modal/waveguide model: (WAV) (MP3)
- Exaggerate pitch glide due to tension modulation: (WAV) (MP3)

Virtual Acoustic Guitar Sound Examples

More Nelson Lee examples:

- Original 1: (WAV) (MP3)
- Synthesized 1: (WAV) (MP3)
- Original 2: (WAV) (MP3)
- Synthesized 2: (WAV) (MP3)
- Original 3: (WAV) (MP3)
- Synthesized 3: (WAV) (MP3)
- Original 4: (WAV) (MP3)
- Synthesized 4: (WAV) (MP3)
- Original 5: (WAV) (MP3)
- Synthesized 5: (WAV) (MP3)
- Original 6: (WAV) (MP3)
- Synthesized 6: (WAV) (MP3)
- Synthesized Chord Demo: (WAV) (MP3)

Haptic Feedback Control for Virtual Instruments

Haptic Virtual Musical Instruments

Recent CCRMA/EE PhD graduate **Ed Berdahl** is working on

Haptic Feedback Control for Virtual Instruments

Goals:

- Assist and/or augment *gestures*
- Assist with *accurate playing*
- Recent projects:
  - Haptically plucked virtual string
  - Active drumhead (one-handed rolls, etc.):

`http://ccrma.stanford.edu/~eberdahl/Projects/HapticDrum/`

Virtual Harpsichord

Harpsichord Modeling

CCRMA/Physics PhD student **Jack Perng** is working on

1. Built a harpsichord jack and monochord
2. Measuring position and velocity data, etc.
3. Developed a novel, more accurate plectrum model
4. Presently working on interfacing the new plectrum to a digital waveguide string

Prof. Tom Rossing collaborating

Harpsichord Jack and Monochord

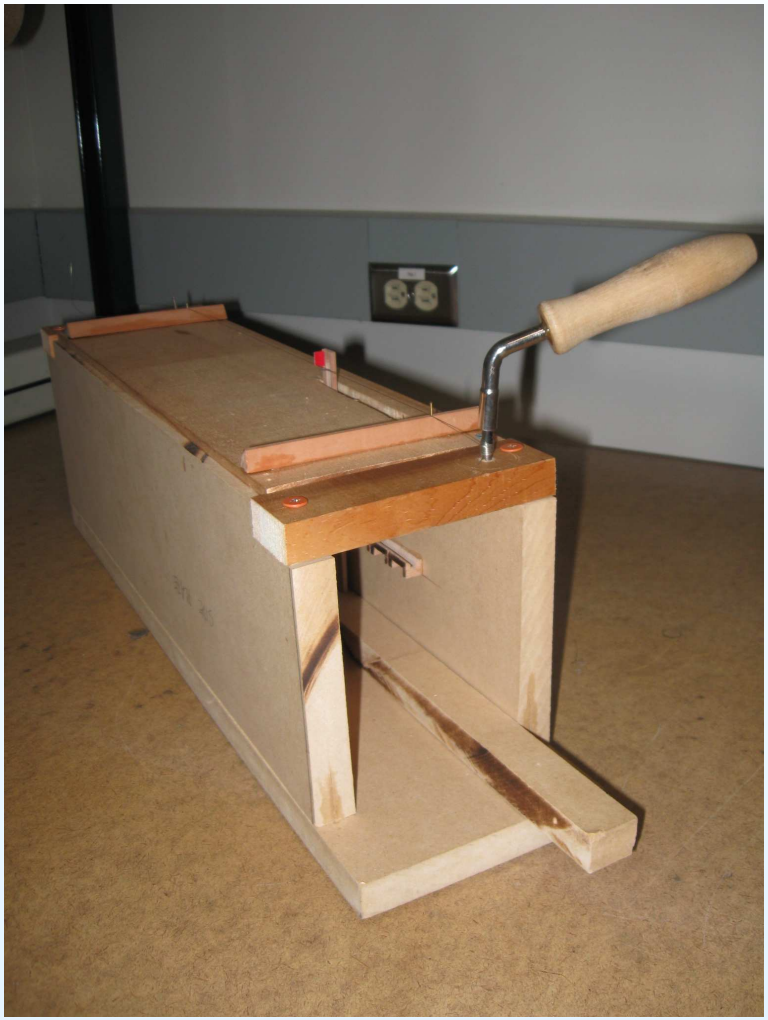

Acoustically Transparent and Configurable Microphone Array

Microphone Array

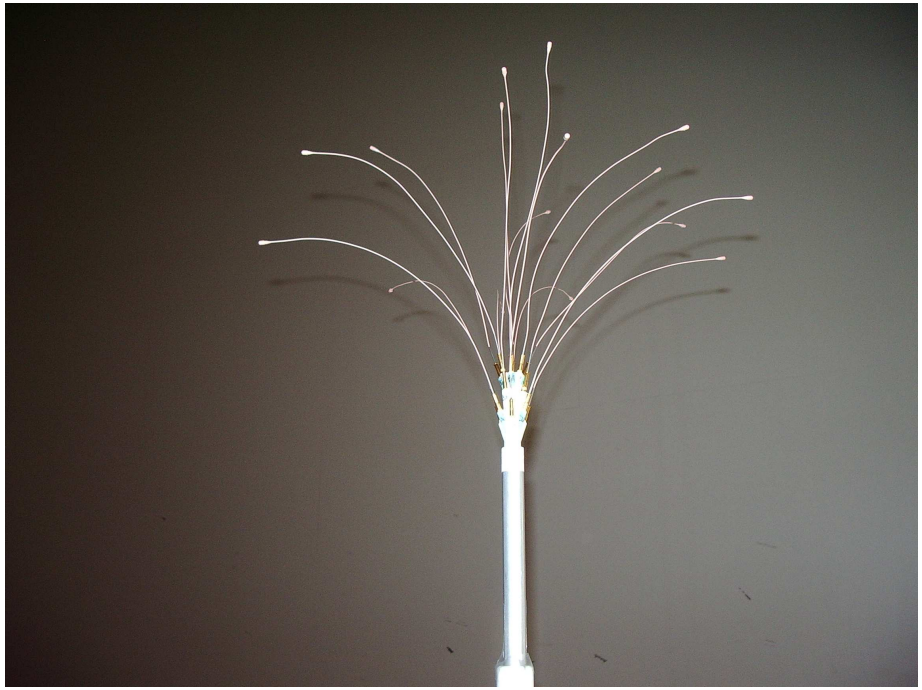

- Adustable geometry (software calibrated)
- Sixteen microphones (Countryman B6 Omni Lavalier):
  - 2 mm diameter capsules
  - 1 mm diameter flexible mounting wire
  - Acoustically transparent over most of the audio band

Recent Paper

"A Configurable Microphone Array with Acoustically Transparent Omnidirectional Elements"

Jonathan Abel, Nicholas Bryan, Travis Skare, Patty Huang, Darius Mostowfi, Miriam Kolar, and Julius Smith

AES-2009, New York

Current Application:

Recording and modeling acoustic properties of underground galleries at pre-Inca archeological site Chavín de Huántar in Peru

Special Issue of the IEEE ASLP

IEEE ASLP Special Issue

The May 2010 issue of the

IEEE Transactions on Audio, Speech, and Langage Processing (ASLP)

was a *special issue* devoted to

Virtual Analog Audio Effects and Musical Instruments

Editors:

- Vesa Välimäki
- Federico Fontana
- Udo Zölzer
- Julius Smith

Check it out!

Special-Issue Papers on Virtual Musical Instruments

- "Tubular Bells — A Physical and Algorithmic Model" by Rabenstein, Koch, and Popp
- "A Block-Based Physical Modeling Approach to the Sound Synthesis of Drums" by Marogna and Avanzini
- "A Virtual Model of Spring Reverberation" by Bilbao and Parker
- "Analysis and Synthesis of Coupled Vibrating Strings Using a Hybrid Modal-Waveguide Synthesis Model" by Lee, Smith, and Välimäki
- "Player-Instrument Interaction Models for Digital Waveguide Synthesis of Guitar: Touch and Collisions" by Evangelista and Eckerholm
- "A Modal-Based Real-Time Piano Synthesizer" by Bank, Zambon, and Fontana

Summary

Summary of a quick look at recent acoustic-modeling research at CCRMA:

- Coupled Strings Analysis and Synthesis — Nelson Lee (CS) — Fourth-order modes for low partials, waveguide model for upper partials; new analysis techniques
- Haptic Virtual Instruments — Ed Berdahl (EE) — Real controllers (with force feedback) for virtual instruments
- Virtual Harpsichord — Jack Perng (Physics) — Monochord+jack measurements toward improved harpsichord synthesis models
- Microphone Array — Jonathan Abel et al. — Acoustically transparent, configurable, software-calibrated microphone array for sampling the 3D sound field
- Special Issue on Virtual Analog Audio Effects and Musical Instruments — Vesa Välimäki et al., eds.

Summary

Summary

We have reviewed a “CCRMA-biased slice” through the history of sound synthesis based on physical modeling, spanning

- Bernoulli’s superposition of simple modes of vibration
- d’Alembert’s superposition of traveling waves
- Physical Modeling Synthesis
- Recent Research at CCRMA