Effects of Vibration Motor Speed and Rhythm on Perception of Phone Call Urgency

Nicole Torcolini
Department of Computer Science
Stanford University
elecator@stanford.edu

Jieun Oh
Department of Music
Stanford University
jieun5@ccrma.stanford.edu

ABSTRACT

Two problems, which are that people fail to notice important calls when their phones are on vibrate mode and do not put their phones on vibrate when loud ringtones are inappropriate, stem from the fact that vibrations are generally not customizable on mobile phones. This paper explores the effects of vibration motor patterns on perception of phone call urgency by having participants compare and evaluate the perceived urgency of vibration patterns, constructed by including up to three variables of interest: abruptness of attack and release, uneven note duration, and double rhythm. By conducting forced-choice comparison tests on eight vibration motor stimuli, we found that the urgency of phone calls is most effectively conveyed when the vibration patterns have, in order of contribution to urgency, the following characteristics: two half-length vibrations in place of one standard-length vibration, sharp attack and release of motor-on and motor-off as opposed to ramping up to maximum motor speed and ramping down to silence, and constant note duration rather than changing vibration lengths. Our results demonstrate the potential of customizing vibration patterns to construct meaningful tactile icons.

ACM Classification: H5.2 [Information interfaces and presentation]: User Interfaces. – Auditory (non-speech) feedback, Haptic I/O.

General terms: Design, Experimentation, Human Factors, Perception.

Keywords: Mobile phones, vibration motor, vibrate, rhythm, urgency

MOTIVATION

People missing important calls because their phones are on vibrate, and phones ringing at inappropriate times served as motivations for our study. By identifying characteristics of vibration that convey urgency, people could detect and identify calls without tonal sound or looking at their phones for caller information.

RELATED WORK

Conveying Information Using a Vibration Motor

Our study is motivated by findings by Brown and Kaaresoja (2006), demonstrating that it is possible to communicate multi-dimensional information in tactons (tactile icons), using a standard mobile phone vibration motor. A recognition rate of 72% was achieved for communicating two pieces of information, which is comparable to a previous experiment that used a high specification transducer. This study demonstrates the potential of conveying complex information using solely a built-in vibration motor in mobile phones.

Exploring Motor Rhythmic Pattern

Qian and Kuber (2009) identified salient tactile cues by manipulating the pulse duration and interval of vibrotactile signals and asking participants to rate salience. What is unique about the finding is that a combination of two static tactons was more effective than dynamic tactile cues. They generated different tacton patterns and combinations based on varying duration and intervals, the general framework of which we adopt in our study.

Similarity Groupings of Rhythmic Haptic Stimulus

We base the design of our stimulus sets based on informed heuristics that have been validated through user participation in a series of studies by Ternes (2007), Ternes and MacLean (2008), and Swerdfeger, Fernquist, Hazelton, and Maclean (2009). Some of the more insightful and relevant findings of the 2009 study, which asked participants to group tactile patterns based on similarity, are as follows:

(1) People paid close attention to abruptness: for instance, attack and release of sounds

(2) Rhythm is the primary feature by which participants grouped similar patterns, and amplitude and frequency are secondary

(3) Their earlier study claims that perceived note density is important, but their later study claims that quarter notes can be replaced with two eighth notes for a within-group (minor) variation.

While we are interested not in similarity groupings but rather in features specific to conveying perceptual urgency, we distilled down the large dimensionality of tactile rhythm-intensity space focusing on these three features.

		000	001	010	011	100	101	110	111
var 1	abrupt attack/ release	n	y	n	y	n	y	n	y
var 2	uneven note duration	n	n	y	y	n	n	y	y
var 3	double notes	n	n	n	n	y	y	y	y

Figure 1: stimulus set and naming convention

HYPOTHESIS

We hypothesized that (1) **abrupt attack and release** (hereafter "variable 1") instead of ramping up then ramping down; (2) **changing vibration duration** (hereafter "variable 2") instead of constant duration; and (3) having **two short vibrations** (hereafter "variable 3") instead of one long vibration would contribute to conveying a sense of urgency because of their contribution to creating a perceptually salient tactile stimulus. These three variables were chosen based on findings of Swerdfeger, Fernquist, Hazelton, and Maclean (2009) as major features by which people group tactile rhythms by similarity. However, we created the precise design of the stimulus set, characterized by the presence (or absence) of each of the three variables, ourselves.

EXPERIMENTAL SETUP

Stimulus Design & Naming Convention

We generated a total of eight vibration patterns, having all possible combinations of each of the three variables being either present or absent. As illustrated in figure 1, we use a three-digit binary number naming convention, such that, going from right to left, the first digit signifies presence of variable 1, the second digit signifies presence of variable 2, and third digit signifies presence of variable 3.

Figure 2 graphically represents one cycle of repeating vibration patterns for the 8 stimuli.

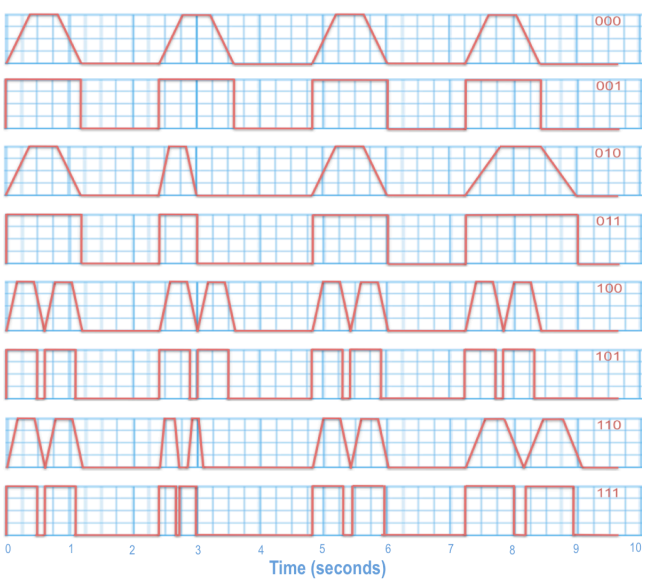

Figure 2: stimulus design: motor intensity vs. time

Hardware

We used Arduino to control a motor to create different vibration patterns. Figure 3 shows the circuit diagram.

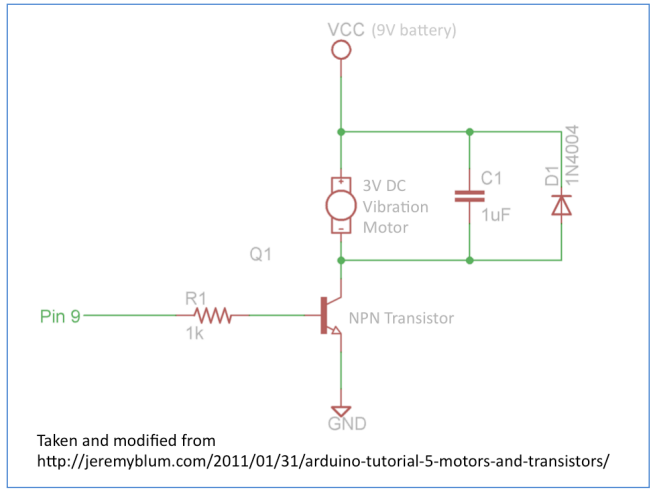

Figure 3: circuit diagram of vibration motor with controllable speed

Figure 4 shows the physical prototype of the circuitry used in our study. To simulate the actual vibration of a cell phone, we removed the battery and placed the motor in the battery compartment, so that the phone would vibrate when the motor vibrated.

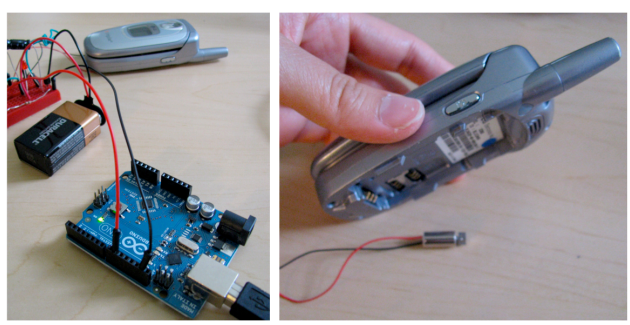

Figure 4: physical prototype

Software

Figure 5 shows a sample code in Arduino used to generate the control stimulus; generation of other stimulus patterns is similar. To watch the vibration motor in action for the control <000> and single-variable stimuli (<001>, <010>, <100>), refer to videos on *https://ccrma.stanford.edu/~jieun5/etc/cs376/presentation/stimuli_video*.

```
// Control <000>
//
// Pattern:
// rampUp(400) --> vibrate(400ms) -->
// rampDown(400) --> silence(1200ms)

int motorPin = 9;
int maxspeed = 40;

void setup()
{
  pinMode (motorPin, OUTPUT);
}

void loop()
{
  // accelerate motor from 0 to maxspeed
  for( int i=0; i<= maxspeed; i++ )
  {
    analogWrite(motorPin, i);
    delay(10);
  }

  // hold at top speed
  delay(400);

  // decrease speed from maxspeed to 0
  for( int i= maxspeed; i>=0; i-- )
  {
    analogWrite(motorPin, i);
    delay(10);
  }

  // hold at 0
  delay(1200);
}
```

Figure 5: Arduino code sample for <000>

EXPERIMENT SESSION

Overview

Nine students participated in our study, comprising of 4 undergraduate and 5 graduate students. Participants were assigned to groups A, B, or C.

In both parts of the experiment, each stimulus is played for at least 4 vibrations, which is 1 full cycle that then repeats. Participants typically listened to 2-3 cycles before making a decision. The participant was asked to gently rest his/her hand on top of the vibrating phone to feel the vibrations, instead of just hearing them.

Part 1 Task

In Part 1 of the experiment, participants were asked to compare two patterns, and choose the stimulus that felt more urgent (i.e., "as though it is an important phone call, trying to get your attention").

One of the two patterns was always the control (<000>, having all three variables absent). The other of the two patterns depended on the group; for group 1, it was the stimulus with just the variable 1 present <001>; for group 2, stimulus with just the variable 2 present <010>; and for group 3, stimulus with just the variable 3 present <100>.

Part 2 Task

In Part 2 of the experiment, participants were asked to compare four patterns, and rank them from most urgent to least urgent. The four patterns depended on the subject's answer from Part 1 as follows: For group A, if <000> was chosen over <001> in Part 1, the four stimuli used in Part 2 were the ones with variable 1 missing: <000>, <010>, <100>, and <110>. On the other hand, if <001> was chosen over <000> in Part 1, then <001>, <011>, <101>, and <111> were used. (Group B and Group C are analogous, anchoring on variable 2 and variable 3, respectively). Participants were allowed to listen to patterns again for clarification. Once the participant had made the decision, the participant was casually asked to explain his/her ordering.

RESULT

Figure 6 shows the result, organized by groups. For each subject (row), dark-yellow-shaded stimulus was chosen over dark-gray-shaded stimulus in Part 1 of the experiment as being more urgent. The four yellow-shaded cells (one dark-yellow and three light-yellow) are the four stimuli that were ranked by each subject in Part 2 of the experiment. The plus sign ("+") denotes relative urgency: "++++" for the most urgent, and "+" for the least urgent, among the four stimuli that participants compared.

		000	001	010	011	100	101	110	111
group A	subject 1	++		+		++++		+++	
	subject 4		++++		++		+++		+
	subject 7		++		+		++++		+++
group B	subject 2	+	++++			++	+++		
	subject 5			+	++			+++	++++
	subject 8			+	++			+++	++++
group C	subject 3					+++	++++	+	++
	subject 6					++	+++	+	++++
	subject 9	+++	+	++++	++				

Figure 6: Experiment Result

ANALYSIS

Based on the urgency ratings, we calculated the **aggregate urgency** for each stimulus by summing up the number of "+"'s obtained. However, since these aggregate values are highly influenced by the number of times they were rated during Part 2 of the experiment, which, in turn, was based on the subjects' responses to Part 1, we divided the aggregate by the number of times each stimulus was rated across the 9 subjects to obtain the expected value of urgency rating, *given* that the stimulus is rated (denoted **E ["+"] | rated**). The relative ordering of **aggregate urgency** values and **E["+"] | rated** values are very similar, suggesting consistency in subjects' response across groups A, B, and C, as well as across Part 1 and Part 2 of the experiment.

Stimuli with just variable 1 (<001>) and just variable 3 (<100>) both have **E ["+"] | rated** of 2.75, while for variable 2 (<010>) is 1.75. Compared with the control (<000>) having urgency rating of 2.00, the data suggests that variable 1 and variable 3 increases perceived urgency, while variable 2 slightly decreases perceived urgency. The stimulus with both variable 1 and variable 3 present (<101>) as well as all three variables (<111>) were rated to be among the most urgent, while stimulus with variable 2 (<010>) and stimulus with variable 1 and variable 2 (<011>) were rated to be among the least urgent. This data suggests that *the three variables are roughly (but not completely) independent*; that is, given a mixture stimulus (i.e., <011>, <101>, <011>, <111>), presence of variable 1 and/or variable 3 tends to increase urgency, while presence of variable 2 tends to decrease urgency.

For each variable, we also evaluate and compare the average of the normalized urgency ratings for the case that the variable is *present* versus *absent*. Variable 3 had the largest difference in the expected urgency rating, given the variable's presence (2.9875) and absence (2.0750), followed by variable 1 (2.8875 for present, 2.1750 for absent). Consistent to our **E["+"] | rated** calculations above, variable 2 had higher expected urgency rating for the *absent* case (2.7250) than the *present* case (2.3375), although the difference is not as significant as they are for variable 1 or variable 3.

DISCUSSION & FUTURE WORK

Our project had some interesting and unexpected results.

1. We expected uneven vibration patterns to convey urgency, but participants rated patterns with even vibrations with higher urgency than those with uneven vibrations, and participants often spoke negatively about the uneven patterns.
2. It was expected that urgency would be based mainly on the vibration itself, but it was found that the duration of the silences between vibrations also matters. Long periods of silence were often the reason that participants considered the uneven patterns to be less urgent.
3. Often, the participants gave patterns different urgency ratings, but they could not articulate which characteristic of the vibration had changed to make the urgency different.
4. It was thought that urgency was the main factor which would cause people to answer their phones; however, based on comments, it was discovered that people would also answer their phones faster if the vibration pattern was perceived as annoying or serious, further demonstrating the potential for using vibration to convey information.

		000	001	010	011	100	101	110	111		
group A	subject 1	++		+		++++		+++			
	subject 4		++++		++		+++		+		
	subject 7		++		+		++++		+++		
group B	subject 2	+	++++			++	+++				
	subject 5			+	++			+++	++++		
	subject 8			+	++			+++	++++		
group C	subject 3					+++	++++	+	++		
	subject 6					++	+++	+	++++		
	subject 9	+++	+	++++	++						
	aggregate urgency	**6**	**11**	**7**	**9**	**11**	**17**	**11**	**18**		
	E["+"] | rated	**2.00**	**2.75**	**1.75**	**1.80**	**2.75**	**3.40**	**2.20**	**3.60**		
										sum	**av**
var 1	present		2.75		1.80		3.40		3.60	**11.55**	**2.8875**
	absent	2.00		1.75		2.75		2.20		**8.70**	**2.1750**
var 2	present			1.75	1.80			2.20	3.60	**9.35**	**2.3375**
	absent	2.00	2.75			2.75	3.40			**10.90**	**2.7250**
var 3	present					2.75	3.40	2.20	3.60	**11.95**	**2.9875**
	absent	2.00	2.75	1.75	1.80					**8.30**	**2.0750**

Figure 7: Analysis of Results

These unanticipated findings should be explored in greater depth in future studies.

ACKNOWLEDGMENTS

The authors would like to acknowledge Professor Scott Klemmer, Jesse Cirimele, and students of CS376 for guidance throughout this project. We would also like to thank the participants of our experiment for their time and input.

REFERENCES

1. Brown, L. and Kaaresoja, T. "Feel Who's Talking: Using Tactons for Mobile Phone Alerts." In *CHI, 2006*.
2. Kaaresoja, T. and Linjama, J. "Perception of Short Tactile Pulses Generated by a Vibration Motor in a Mobile Phone." In *Proceedings of the First Joint Eurohaptics Conference and Symposium on Haptic Interfaces for Virtual Environment and Teleoperator Systems*, 2005.
3. Qian, H., Kuber, R., and Sears, A. "Towards Identifying Distinguishable Tactons for Use with Mobile Devices." In *ACM Conference on Computers and Accessibility*, 2009.
4. Sahami, A., Holleis, P., Schmidt, A., and Hakkila, J. "Rich Tactile Output on Mobile Devices." In *Ambient Intelligence, Lecture Notes in Computer Science*, Vol. 5355, 2008.
5. Swerdfeger, B., Fernquist, J., Hazelton, T., and MacLean, K. "Exploring Melodic Variance in Rhythmic Haptic Stimulus Design." In *Graphics Interface Conference 2009*.
6. Ternes, D. "Building Large Sets of Haptic Icons: Rhythm as a Design Parameter, and Between-Subjects mds for Evaluation." Master's Thesis, University of British Columbia, 2007.
7. Ternes, D and Maclean, K. "Designing Large Sets of Haptic Icons with Rhythm." In *Eurohaptics*, pages 199-208, 2008.
8. Yao, H., Grant, D., and Cruz-Hernandez, J. "Perceived Vibration Strength in Mobile Devices: The Effect of Weight and Frequency." In *IEEE Transactions on Haptics*, Vol.3, No. 1, January-March 2010.