Physical Modeling Sound Synthesis

Julius Smith
CCRMA, Stanford University

AES-2006 Masterclass

October 7, 2006

Overview
Early Voice Models
Digital Voice Models
Karplus Strong
Digital Waveguides
Single Reeds
Bowed Strings
Distortion Guitar
Commuted Synthesis
Digital Waveguide Mesh
Horn Filter Design
Finite Differences
Virtual Analog
Wave Digital Filters

Overview

Overview
- Outline

Early Voice Models

Digital Voice Models

Karplus Strong

Digital Waveguides

Single Reeds

Bowed Strings

Distortion Guitar

Commuted Synthesis

Digital Waveguide Mesh

Horn Filter Design

Finite Differences

Virtual Analog

Wave Digital Filters

Outline

Synthesis approaches in approximate historical order, including selected research updates, for

- Voice
- Plucked Strings
- Woodwinds
- Bowed Strings
- Piano and Harpsichord
- Membranes and Plates
- Horns
- Related Topics

Reference: *Physical Audio Signal Processing* (online book)

Overview
Early Voice Models
Digital Voice Models
Karplus Strong
Digital Waveguides
Single Reeds
Bowed Strings
Distortion Guitar
Commuted Synthesis
Digital Waveguide Mesh
Horn Filter Design
Finite Differences
Virtual Analog
Wave Digital Filters

Early Voice Models

Early Talking Machines (Virtual Talking Heads)

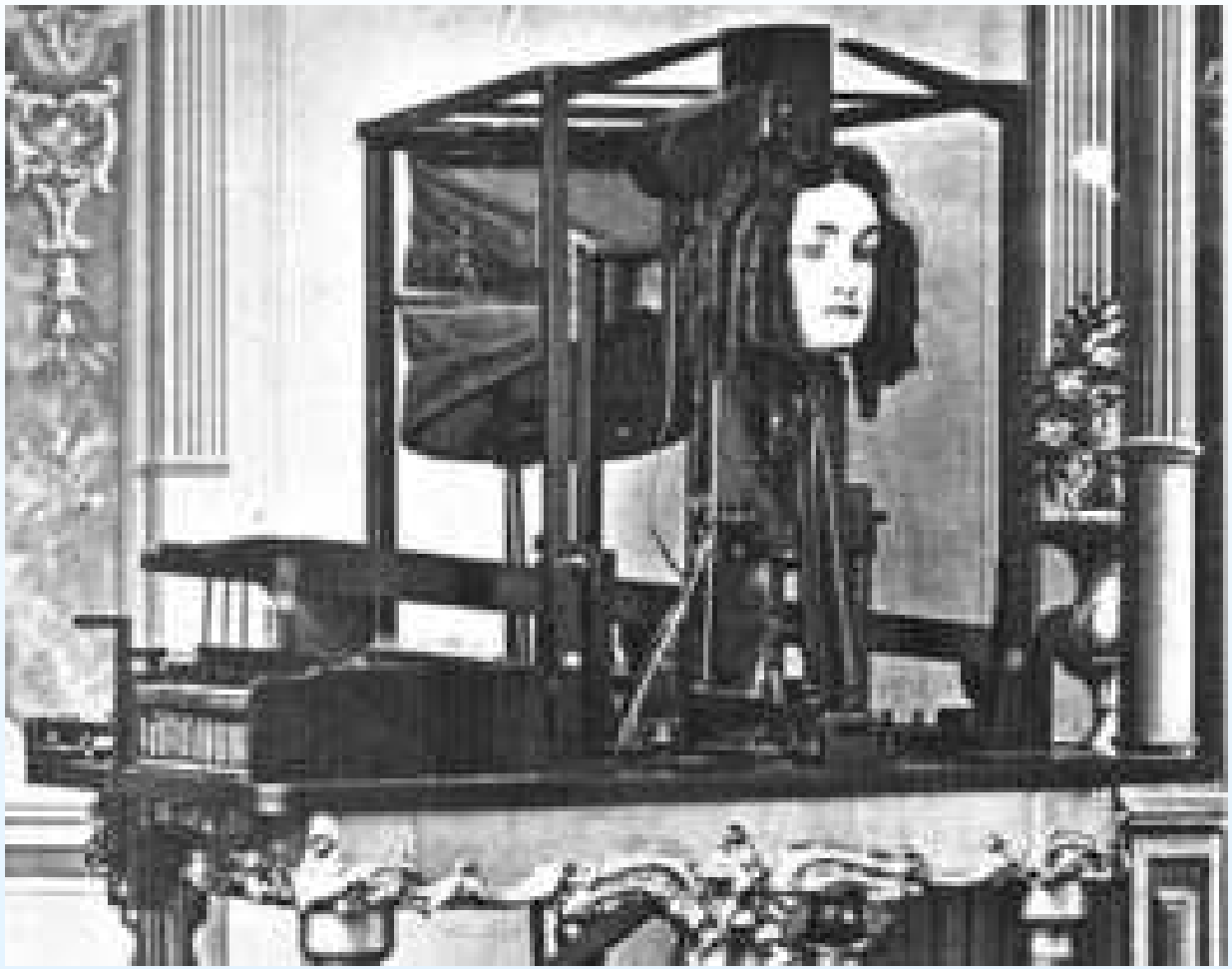

Joseph Faber's Euphonia

Early Brazen Heads (Wikipedia)

- $\approx$ 1125: First talking head description:
  William of Malmesbury's History of the English Kings:
  - Pope Sylvester II said to have traveled to al-Andalus and stolen a tome of secret knowledge
  - Only able to escape through demonic assistance
  - Cast the head of a statue using his knowledge of astrology
  - It would not speak until spoken to, but then answered any yes/no question put to it
- Early devices were deemed *heretical* by the Church and often destroyed
- 1599: Albertus Magnus had a head with a human voice and breath:
  - "A certain reasoning process" bestowed by a *cacodemon* (evil demon)
  - Thomas Aquinas destroyed it for continually interrupting his ruminations (not everyone wants a yacking cacodemon around all the time)
- By the 18th century, talking machines became acceptable as "scientific pursuit"

Overview
Early Voice Models
- Virtual Heads
- Von Kempelin
- Euphonia
- Voder Keyboard
- Voder Schematic
- Voder Demos

Digital Voice Models
Karplus Strong
Digital Waveguides
Single Reeds
Bowed Strings
Distortion Guitar
Commuted Synthesis
Digital Waveguide Mesh
Horn Filter Design
Finite Differences
Virtual Analog
Wave Digital Filters

Wolfgang Von Kempelin's Speaking Machine (1791)

Replica of Wolfgang Von Kempelin's Speaking Machine

Overview
Early Voice Models
- Virtual Heads
- Von Kempelin
- Euphonia
- Voder Keyboard
- Voder Schematic
- Voder Demos

Digital Voice Models
Karplus Strong
Digital Waveguides
Single Reeds
Bowed Strings
Distortion Guitar
Commuted Synthesis
Digital Waveguide Mesh
Horn Filter Design
Finite Differences
Virtual Analog
Wave Digital Filters

Joseph Faber's Euphonia (1846)

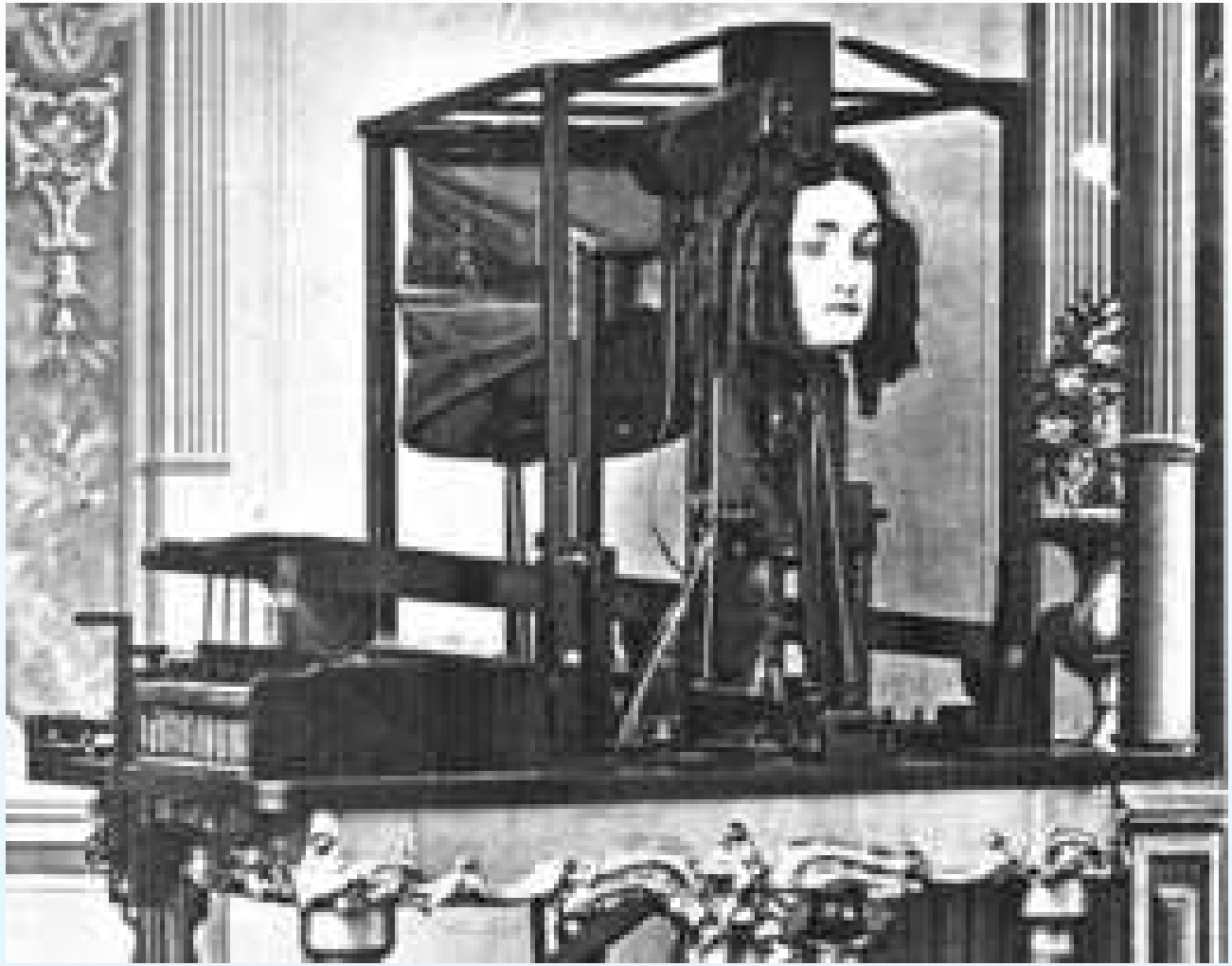

Joseph Faber's Euphonia

17 levers, a bellows, and a telegraphic line — sang "God Save the Queen"

Overview
Early Voice Models
- Virtual Heads
- Von Kempelin
- Euphonia
- Voder Keyboard
- Voder Schematic
- Voder Demos

Digital Voice Models
Karplus Strong
Digital Waveguides
Single Reeds
Bowed Strings
Distortion Guitar
Commuted Synthesis
Digital Waveguide Mesh
Horn Filter Design
Finite Differences
Virtual Analog
Wave Digital Filters

Joseph Faber's Euphonia (1846)

The Voder (Homer Dudley — 1939 Worlds Fair)

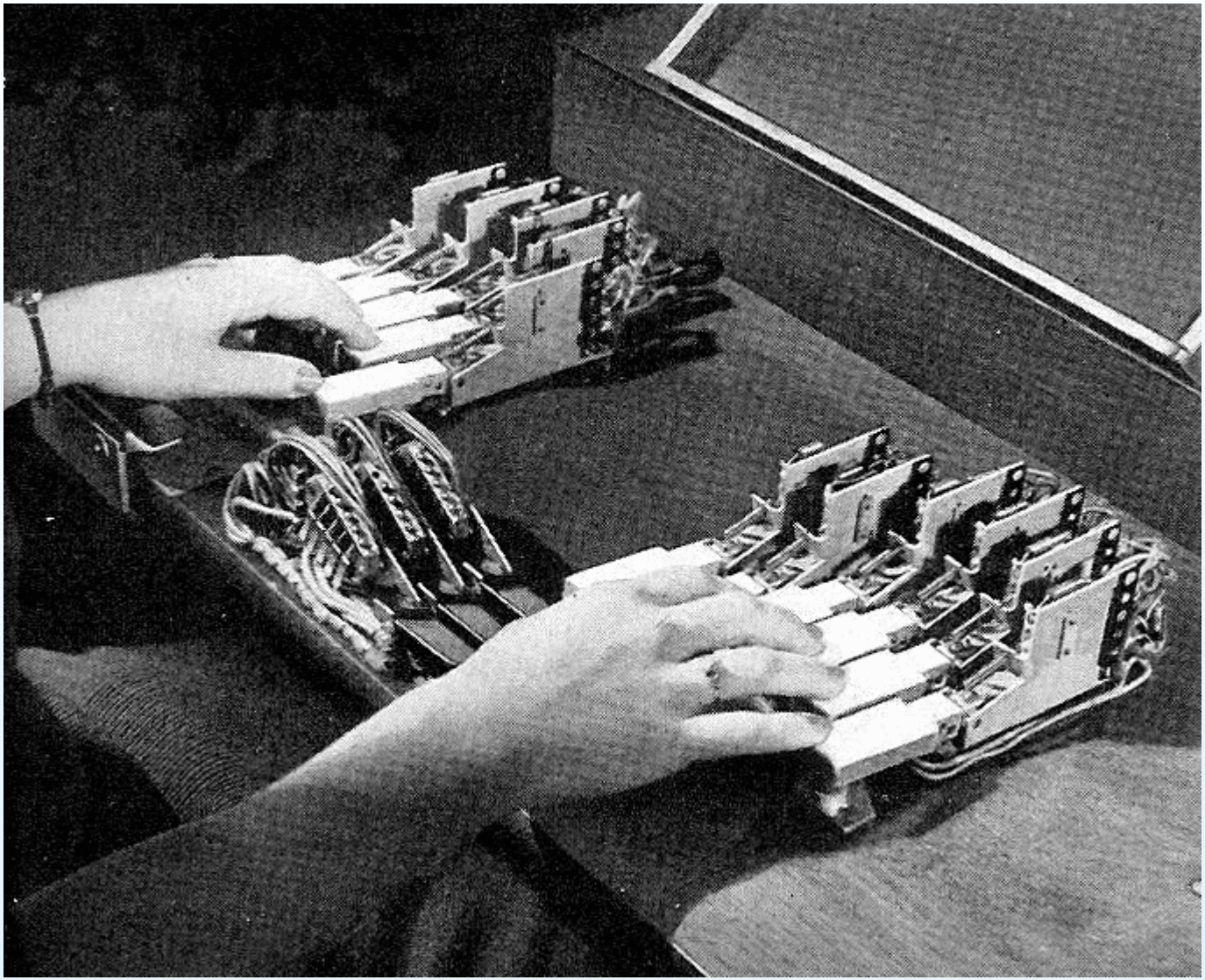

>

http://davidszondy.com/future/robot/voder.htm

Voder Keyboard

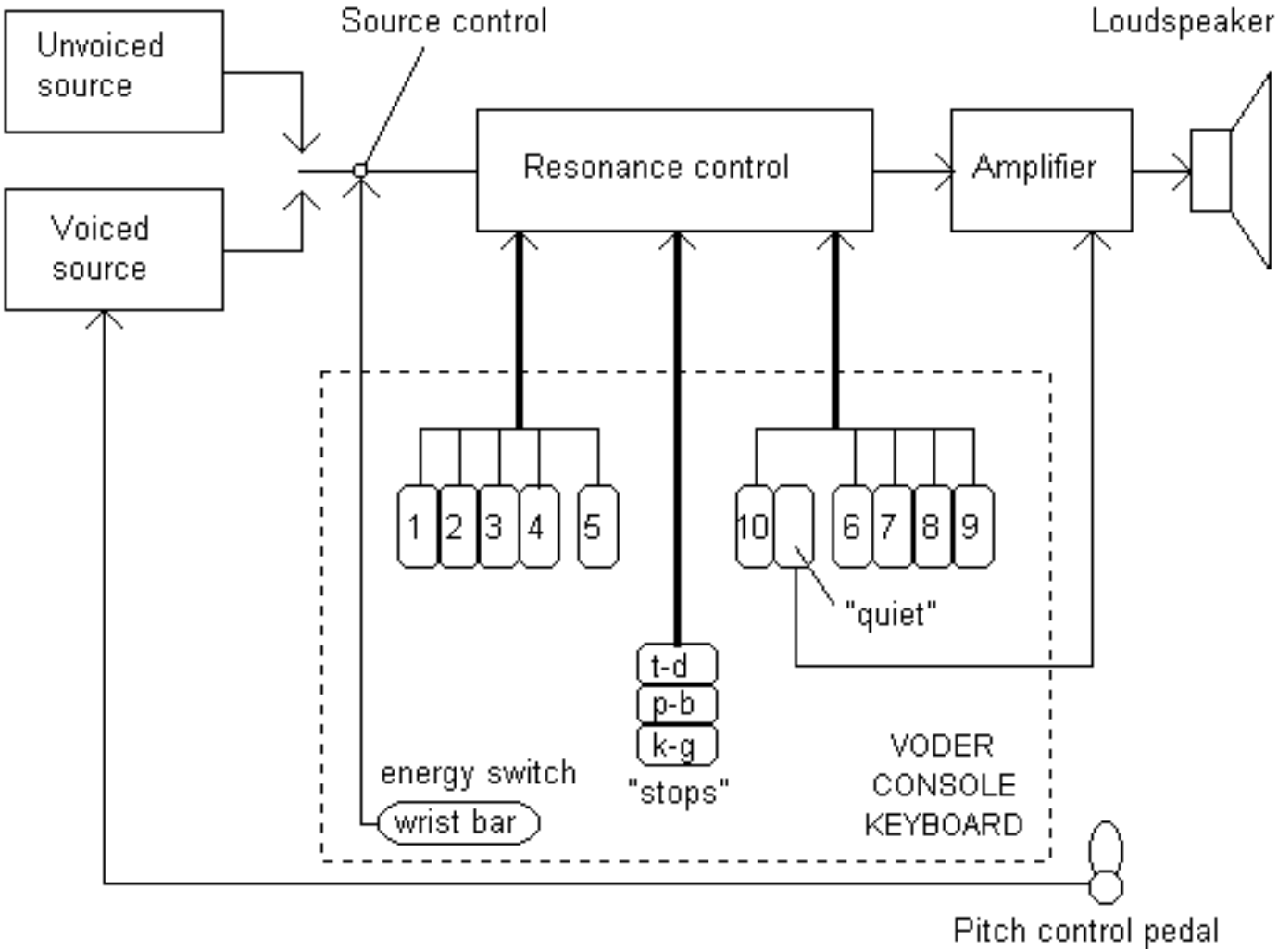

http://www.acoustics.hut.fi/publications/files/theses/lemmetty_mst/chap2.html — (from Klatt 1987)

Voder Schematic

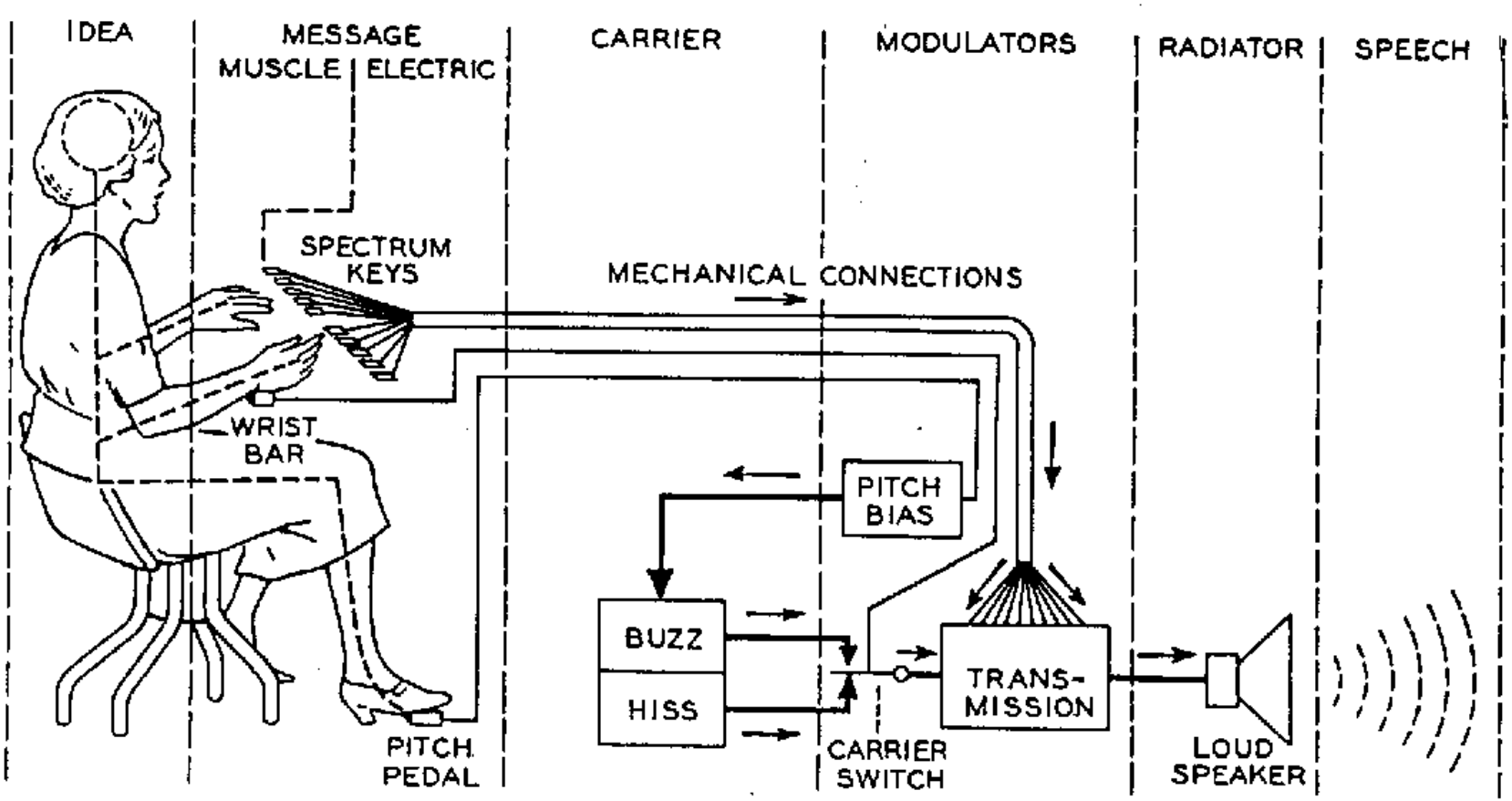

Fig. 8—Schematic circuit of the voder.

http://ptolemy.eecs.berkeley.edu/~eal/audio/voder.html

Overview

Early Voice Models
- Virtual Heads
- Von Kempelin
- Euphonia
- Voder Keyboard
- Voder Schematic
- Voder Demos

Digital Voice Models

Karplus Strong

Digital Waveguides

Single Reeds

Bowed Strings

Distortion Guitar

Commuted Synthesis

Digital Waveguide Mesh

Horn Filter Design

Finite Differences

Virtual Analog

Wave Digital Filters

Voder Demos

- Video
- Audio

Overview
Early Voice Models
Digital Voice Models
Karplus Strong
Digital Waveguides
Single Reeds
Bowed Strings
Distortion Guitar
Commuted Synthesis
Digital Waveguide Mesh
Horn Filter Design
Finite Differences
Virtual Analog
Wave Digital Filters

Digital Voice Models

Overview
Early Voice Models
Digital Voice Models
- KL Voice
- "Daisy"
- "Shiela"
- Linear Prediction
- Glottal Model
- Source Estimation
- LF Glottal Model
- Phonation Variation
- Lu Sounds
- Tak
- 2D Vowels
- Pink Trombone

Karplus Strong
Digital Waveguides
Single Reeds
Bowed Strings
Distortion Guitar
Commuted Synthesis
Digital Waveguide Mesh
Horn Filter Design
Finite Differences

Kelly-Lochbaum Vocal Tract Model (Discrete-Time Transmission-Line Model)

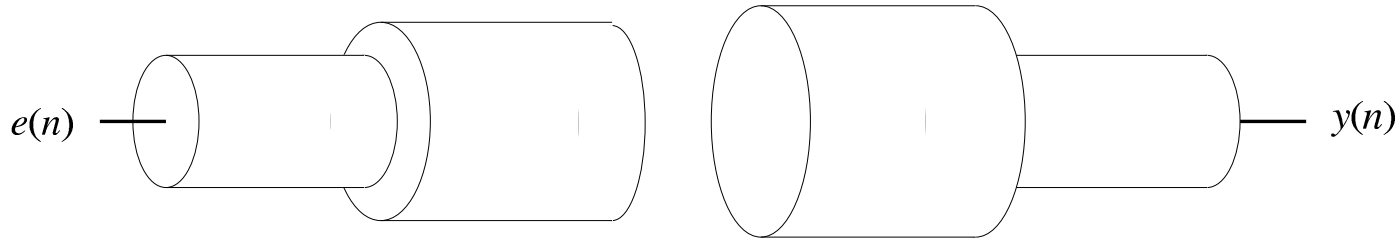

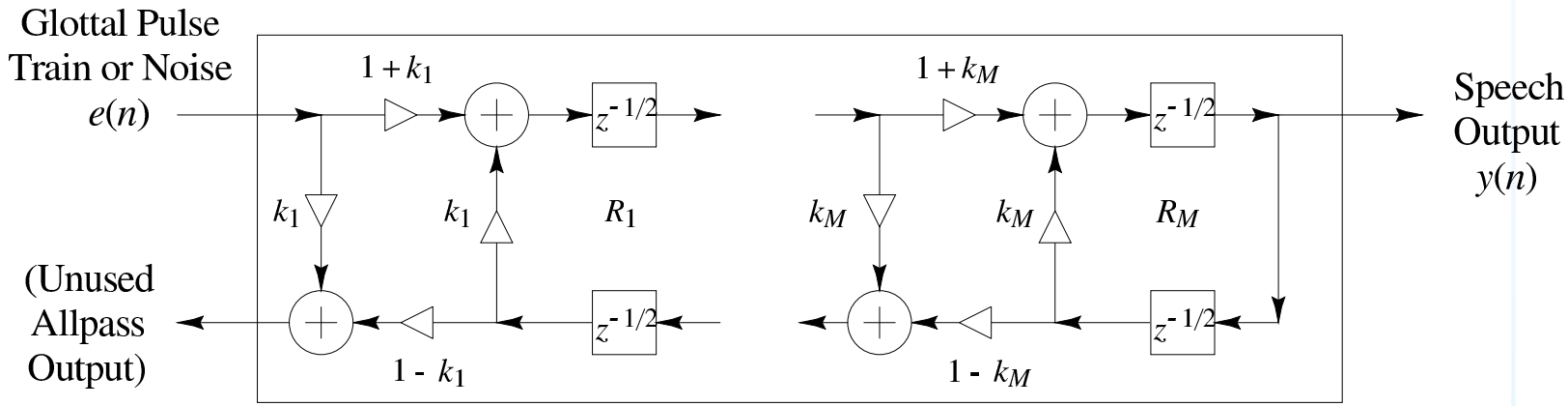

Kelly-Lochbaum Vocal Tract Model (Piecewise Cylindrical)

John L. Kelly and Carol Lochbaum (1962)

Overview
Early Voice Models
Digital Voice Models
- KL Voice
- "Daisy"
- "Shiela"
- Linear Prediction
- Glottal Model
- Source Estimation
- LF Glottal Model
- Phonation Variation
- Lu Sounds
- Tak
- 2D Vowels
- Pink Trombone

Karplus Strong
Digital Waveguides
Single Reeds
Bowed Strings
Distortion Guitar
Commuted Synthesis
Digital Waveguide Mesh
Horn Filter Design
Finite Differences

Sound Example

"Bicycle Built for Two": (WAV) (MP3)

- Vocal part by Kelly and Lochbaum (1961)
- Musical accompaniment by Max Mathews
- Computed on an IBM 704
- Based on Russian speech-vowel data from Gunnar Fant's book
- Probably the first digital physical-modeling synthesis sound example by any method
- Inspired Arthur C. Clarke to adapt it for "2001: A Space Odyssey" — the computer's "first song"

Overview
Early Voice Models
Digital Voice Models
- KL Voice
- “Daisy”
- “Shiela”
- Linear Prediction
- Glottal Model
- Source Estimation
- LF Glottal Model
- Phonation Variation
- Lu Sounds
- Tak
- 2D Vowels
- Pink Trombone

Karplus Strong
Digital Waveguides
Single Reeds
Bowed Strings
Distortion Guitar
Commuted Synthesis
Digital Waveguide Mesh
Horn Filter Design
Finite Differences

“Shiela” Sound Examples by Perry Cook (1990)

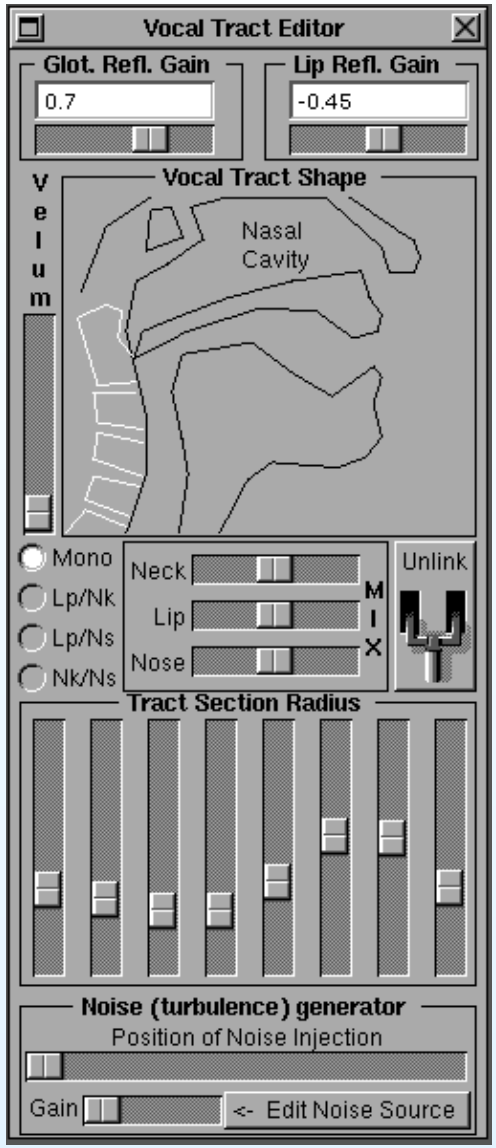

- Diphones: (WAV) (MP3)
- Nasals: (WAV) (MP3)
- Scales: (WAV) (MP3)
- “Shiela”: (WAV) (MP3)

Overview

Early Voice Models

Digital Voice Models
- KL Voice
- "Daisy"
- "Shiela"
- Linear Prediction
- Glottal Model
- Source Estimation
- LF Glottal Model
- Phonation Variation
- Lu Sounds
- Tak
- 2D Vowels
- Pink Trombone

Karplus Strong

Digital Waveguides

Single Reeds

Bowed Strings

Distortion Guitar

Commuted Synthesis

Digital Waveguide Mesh

Horn Filter Design

Finite Differences

Linear Prediction (LP) Vocal Tract Model

- Can be interpreted as a modified Kelly-Lochbaum model
- In linear prediction, the glottal excitation must be an
  - *impulse*, or
  - *white noise*

  This prevents LP from finding a physical vocal-tract model
- A *more realistic glottal waveform* $e(n)$ is needed before the vocal tract filter can have the "right shape"
- How to augment LPC in this direction without going to a full-blown *articulatory synthesis model?*

> Jointly estimate *glottal waveform* $e(n)$ so that the vocal-tract filter converges to the "right shape"

Overview
Early Voice Models
Digital Voice Models
- KL Voice
- “Daisy”
- “Shiela”
- Linear Prediction
- Glottal Model
- Source Estimation
- LF Glottal Model
- Phonation Variation
- Lu Sounds
- Tak
- 2D Vowels
- Pink Trombone

Karplus Strong
Digital Waveguides
Single Reeds
Bowed Strings
Distortion Guitar
Commuted Synthesis
Digital Waveguide Mesh
Horn Filter Design
Finite Differences

Klatt Derivative Glottal Wave

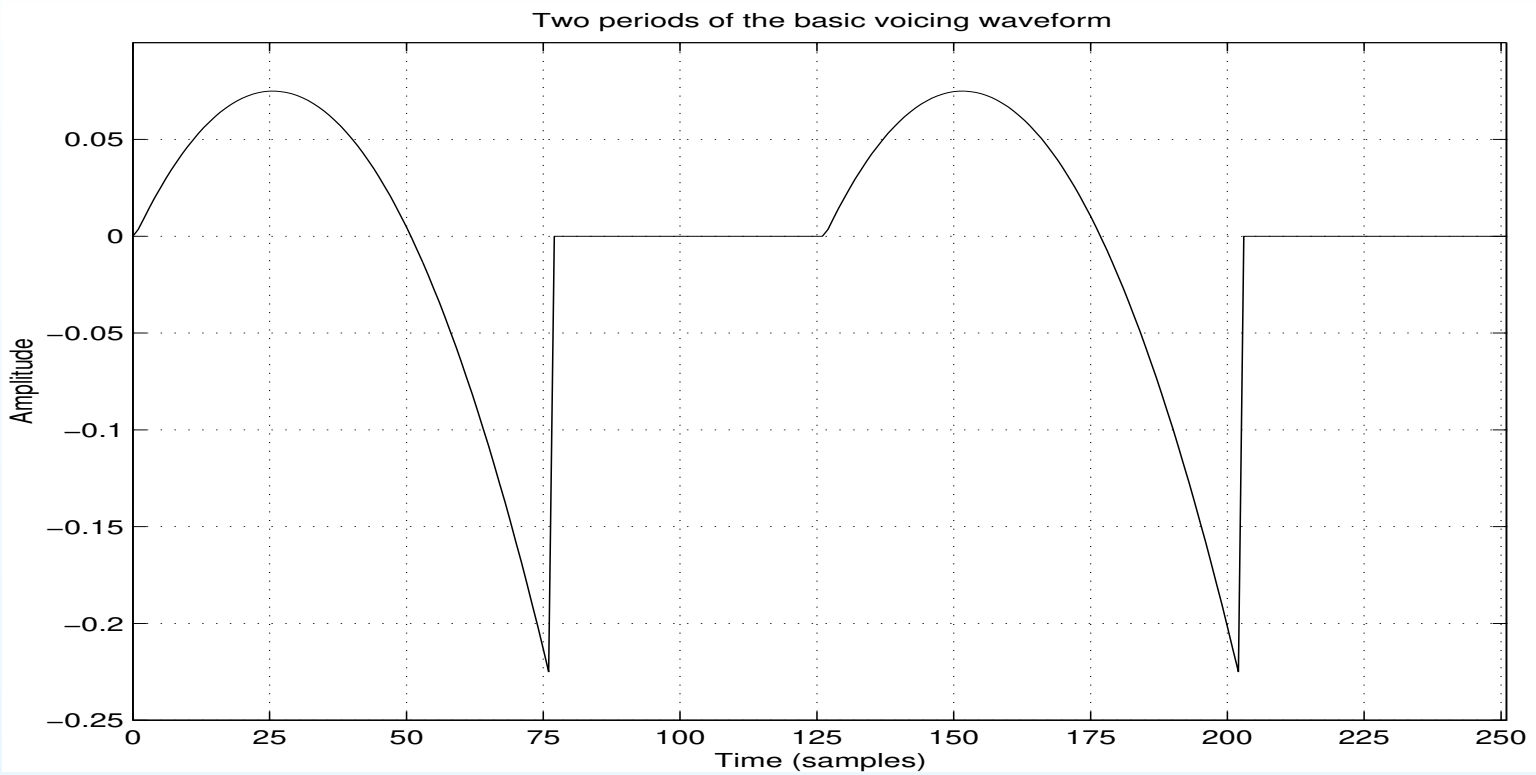

Good for estimation:

- Truncated *parabola* each period
- Coefficients easily fit to *phase-aligned* inverse-filter output

Overview
Early Voice Models
Digital Voice Models
- KL Voice
- "Daisy"
- "Shiela"
- Linear Prediction
- Glottal Model
- Source Estimation
- LF Glottal Model
- Phonation Variation
- Lu Sounds
- Tak
- 2D Vowels
- Pink Trombone

Karplus Strong
Digital Waveguides
Single Reeds
Bowed Strings
Distortion Guitar
Commuted Synthesis
Digital Waveguide Mesh
Horn Filter Design
Finite Differences

Sequential Unconstrained Minimization

(Hui Ling Lu, 2002)

Klatt glottal (parabola) parameters are estimated *jointly* with vocal tract filter coefficients

- Formulation resembles that of the *equation error method for system identification* (also used in `invfreqz` in matlab)
- For *phase alignment*, we estimate
  - pitch (time varying)
  - glottal closure instant each period
- Optimization is *convex* in all but the phase-alignment dimension
  $\Rightarrow$ one potentially nonlinear line search

Overview
Early Voice Models
Digital Voice Models
- KL Voice
- “Daisy”
- “Shiela”
- Linear Prediction
- Glottal Model
- Source Estimation
- LF Glottal Model
- Phonation Variation
- Lu Sounds
- Tak
- 2D Vowels
- Pink Trombone

Karplus Strong
Digital Waveguides
Single Reeds
Bowed Strings
Distortion Guitar
Commuted Synthesis
Digital Waveguide Mesh
Horn Filter Design
Finite Differences

Liljencrantz-Fant Derivative Glottal Wave Model

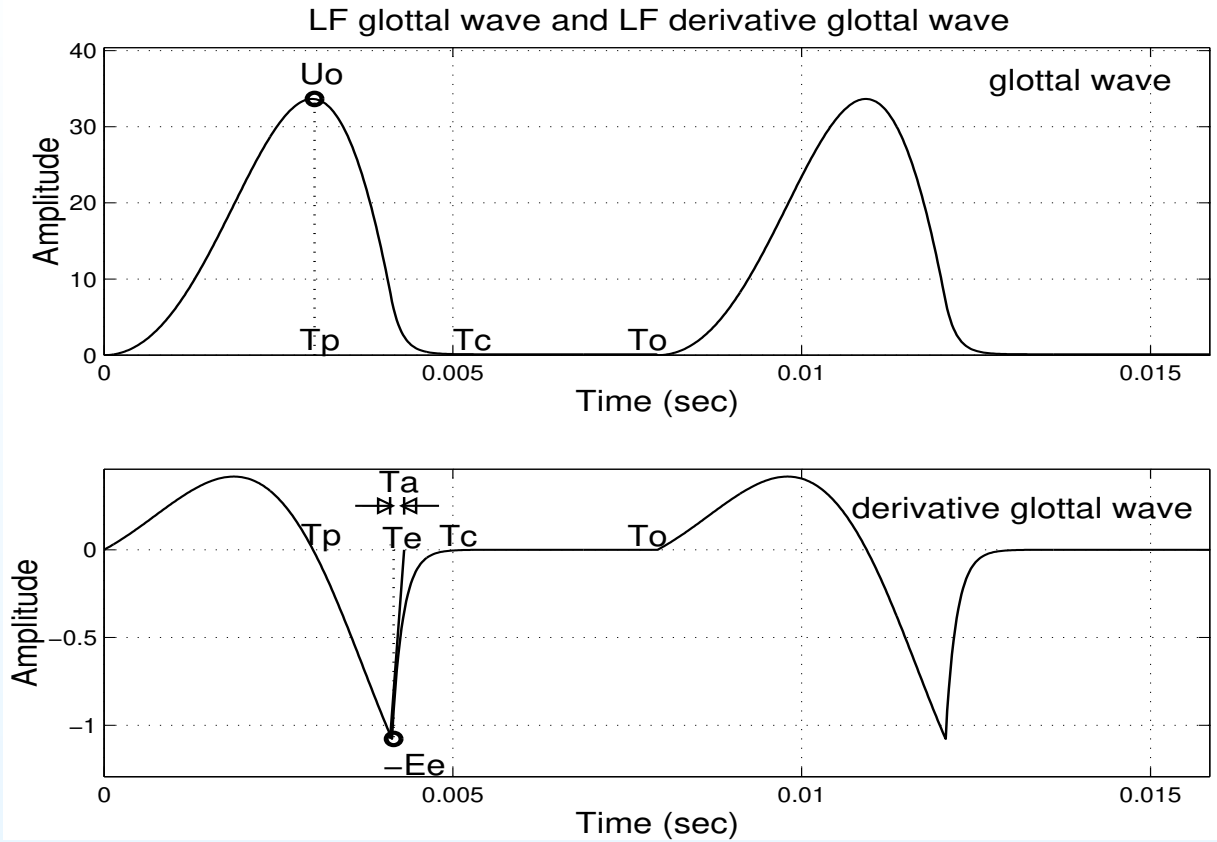

- Better for *intuitively parametrized expressive synthesis*
- LF model parameters are fit to *inverse filter* output
- Use of Klatt model in forming filter estimate yields a “more physical” filter than LP

Parametrized Phonation Types

Overview

Early Voice Models

Digital Voice Models

- KL Voice
- “Daisy”
- “Shiela”
- Linear Prediction
- Glottal Model
- Source Estimation
- LF Glottal Model
- Phonation Variation
- Lu Sounds
- Tak
- 2D Vowels
- Pink Trombone

Karplus Strong

Digital Waveguides

Single Reeds

Bowed Strings

Distortion Guitar

Commuted Synthesis

Digital Waveguide Mesh

Horn Filter Design

Finite Differences

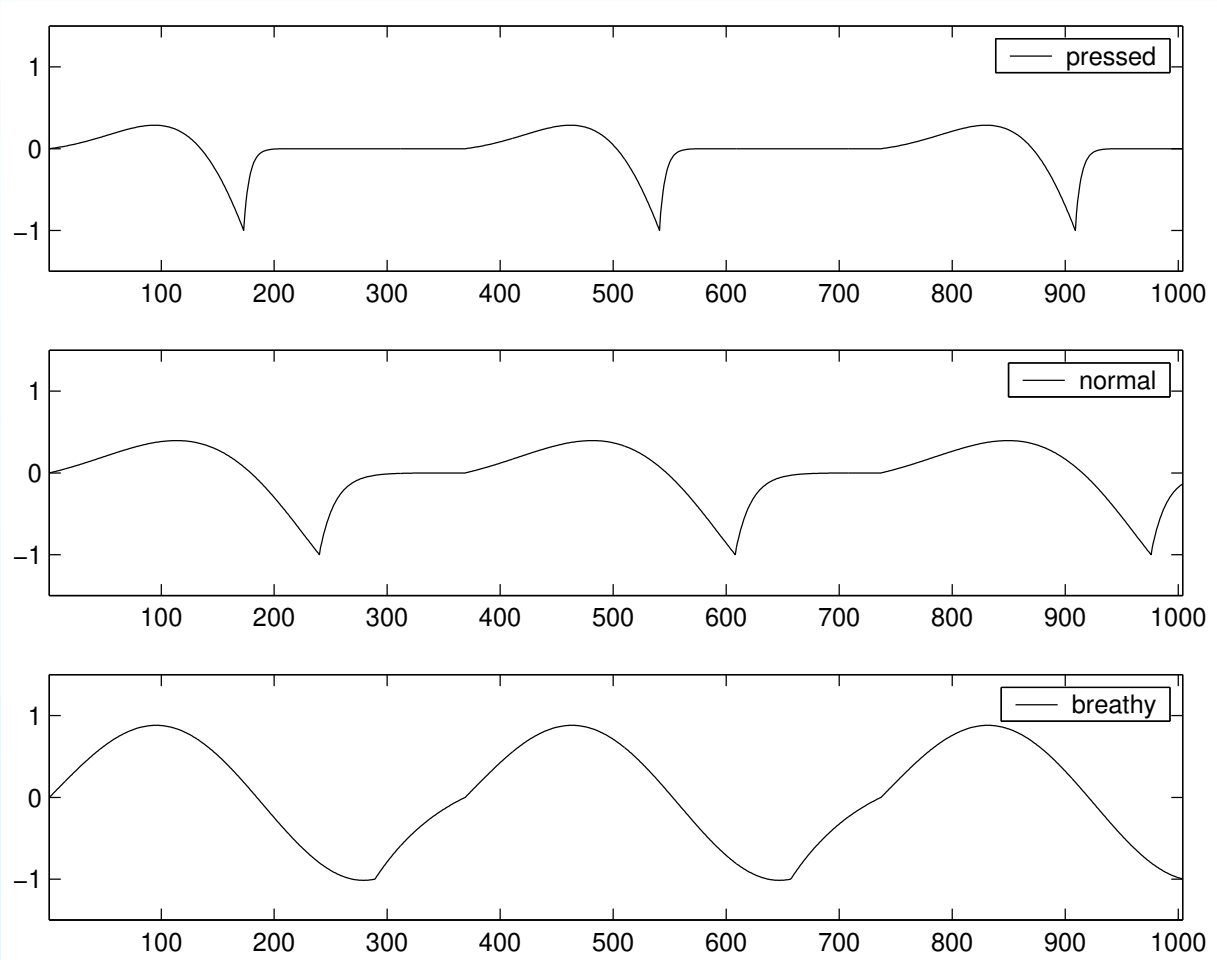

Overview
Early Voice Models
Digital Voice Models
- KL Voice
- “Daisy”
- “Shiela”
- Linear Prediction
- Glottal Model
- Source Estimation
- LF Glottal Model
- Phonation Variation
- Lu Sounds
- Tak
- 2D Vowels
- Pink Trombone

Karplus Strong
Digital Waveguides
Single Reeds
Bowed Strings
Distortion Guitar
Commuted Synthesis
Digital Waveguide Mesh
Horn Filter Design
Finite Differences

Sound Examples by Hui Ling Lu

- Original: (WAV) (MP3)
- Synthesized:
  - Pressed Phonation: (WAV) (MP3)
  - Normal Phonation: (WAV) (MP3)
  - Breathy Phonation: (WAV) (MP3)
- Original: (WAV) (MP3)
- Synthesis 1: (WAV) (MP3)
- Synthesis 2: (WAV) (MP3)

where

- Synthesis 1 = Estimated Vocal Tract driven by estimated KLGLOT88 Derivative Glottal Wave (Pressed)
- Synthesis 2 = Estimated Vocal Tract driven by the fitted LF Derivative Glottal Wave (Pressed)

`Google` search: *singing synthesis Lu*

Overview
Early Voice Models
Digital Voice Models
- KL Voice
- “Daisy”
- “Shiela”
- Linear Prediction
- Glottal Model
- Source Estimation
- LF Glottal Model
- Phonation Variation
- Lu Sounds
- Tak
- 2D Vowels
- Pink Trombone

Karplus Strong
Digital Waveguides
Single Reeds
Bowed Strings
Distortion Guitar
Commuted Synthesis
Digital Waveguide Mesh
Horn Filter Design
Finite Differences

Voice Model Estimation

(Pamornpol (Tak) Jinachitra 2006)

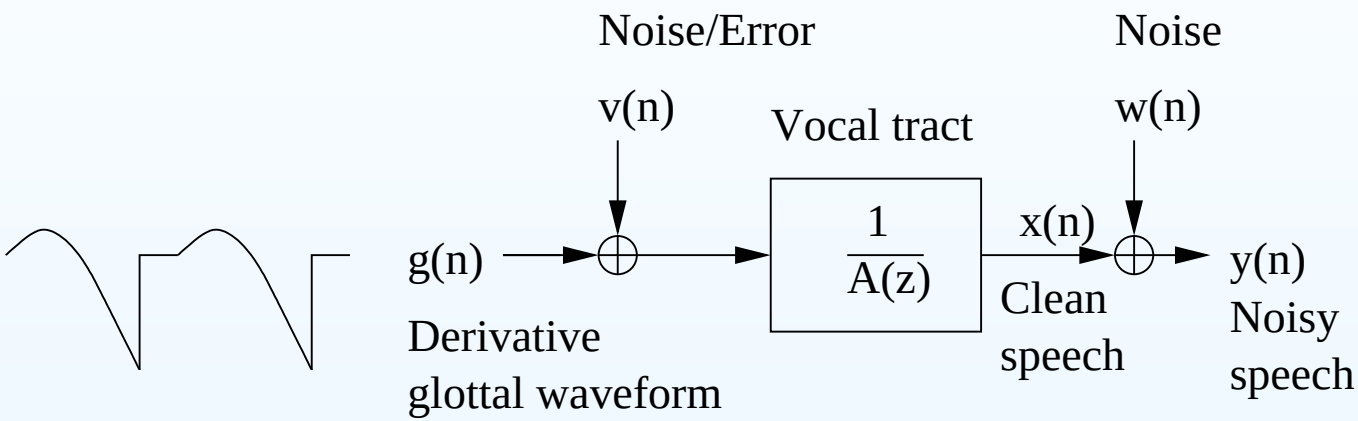

- Parametric source-filter model of voice + noise
- State-space framework with derivative glottal waveform as input and A model for dynamics
- Jointly estimate AR parameters and glottal source parameters using EM algorithm with Kalman smoothing
- Reconstruct a clean voice using Kelly-Lochbaum and estimated parameters

Online 2D Vowel Demo (2014)

Jan Schnupp, Eli Nelken, and Andrew King

http://auditoryneuroscience.com/topics/two-formant-artificial-vowels

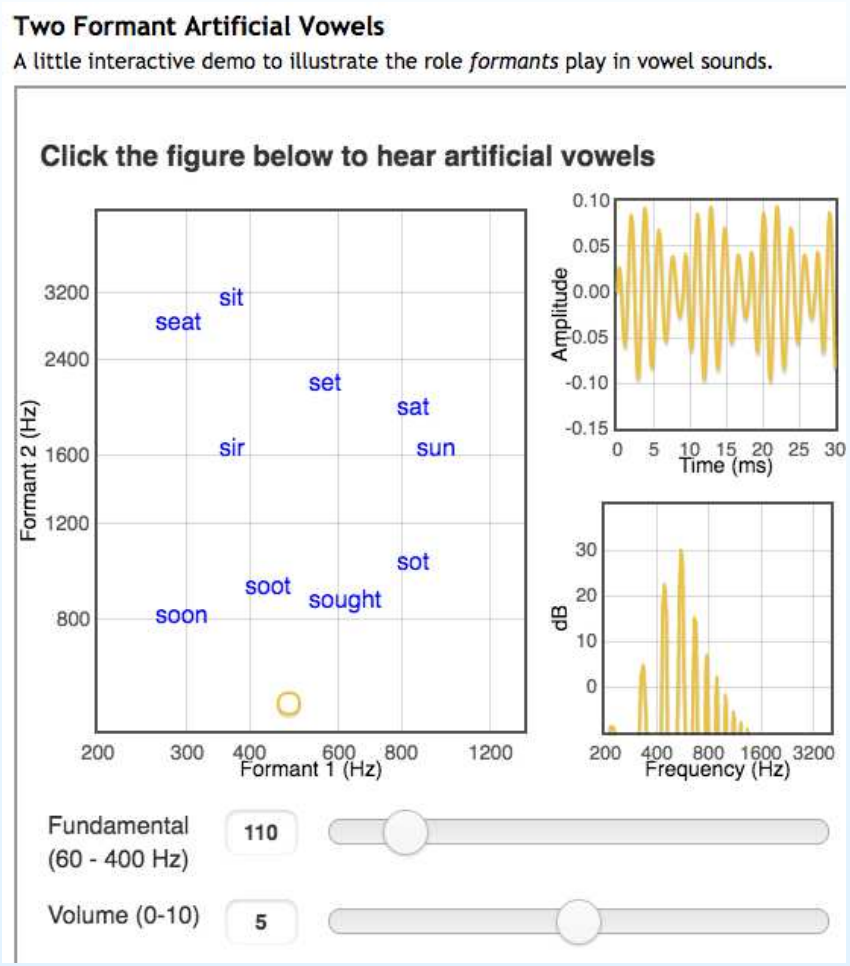

Overview
Early Voice Models
Digital Voice Models
- KL Voice
- “Daisy”
- “Shiela”
- Linear Prediction
- Glottal Model
- Source Estimation
- LF Glottal Model
- Phonation Variation
- Lu Sounds
- Tak
- 2D Vowels
- Pink Trombone

Karplus Strong
Digital Waveguides
Single Reeds
Bowed Strings
Distortion Guitar
Commuted Synthesis
Digital Waveguide Mesh
Horn Filter Design
Finite Differences

Pink Trombone Voical Synthesis (March 2017)

Neil Thapen
Institute of Mathematics of the Academy of Sciences
Czech Republic

http://dood.al/pinktrombone/

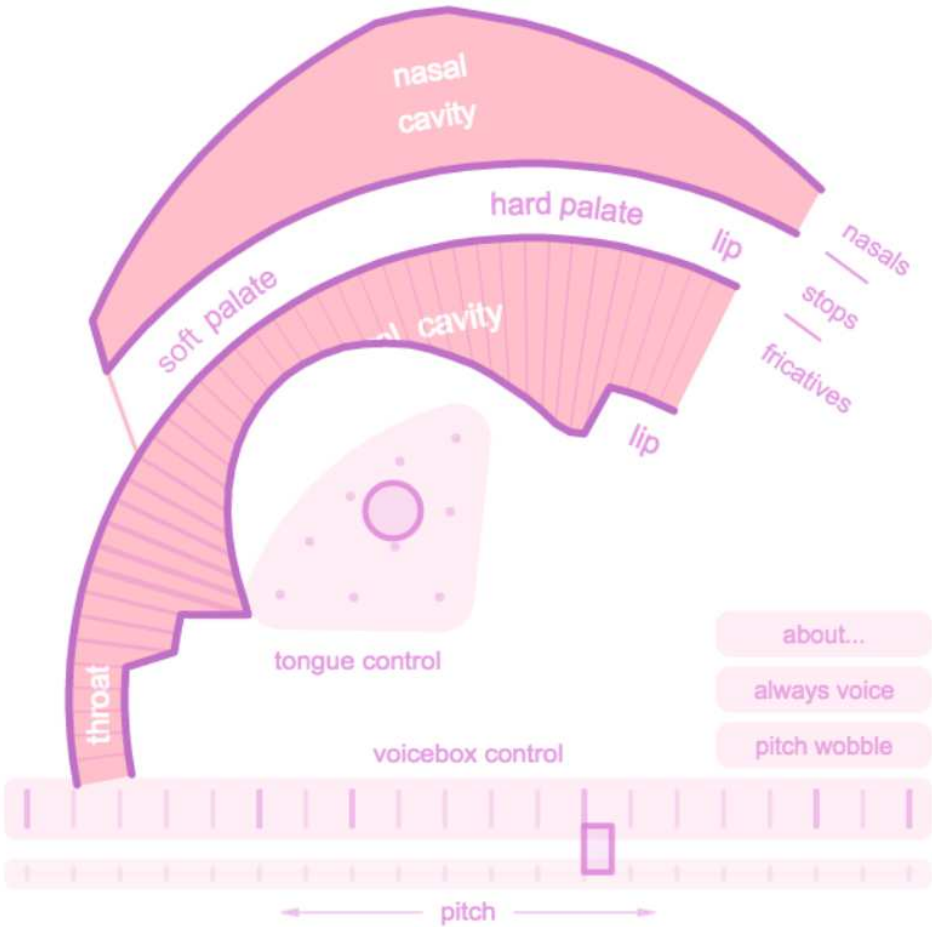

Overview
Early Voice Models
Digital Voice Models
Karplus Strong
Digital Waveguides
Single Reeds
Bowed Strings
Distortion Guitar
Commuted Synthesis
Digital Waveguide Mesh
Horn Filter Design
Finite Differences
Virtual Analog
Wave Digital Filters

Karplus-Strong (KS) Algorithm

Overview
Early Voice Models
Digital Voice Models
Karplus Strong
● Karplus Strong
Digital Waveguides
Single Reeds
Bowed Strings
Distortion Guitar
Commuted Synthesis
Digital Waveguide Mesh
Horn Filter Design
Finite Differences
Virtual Analog
Wave Digital Filters

Karplus-Strong (KS) Algorithm (1983)

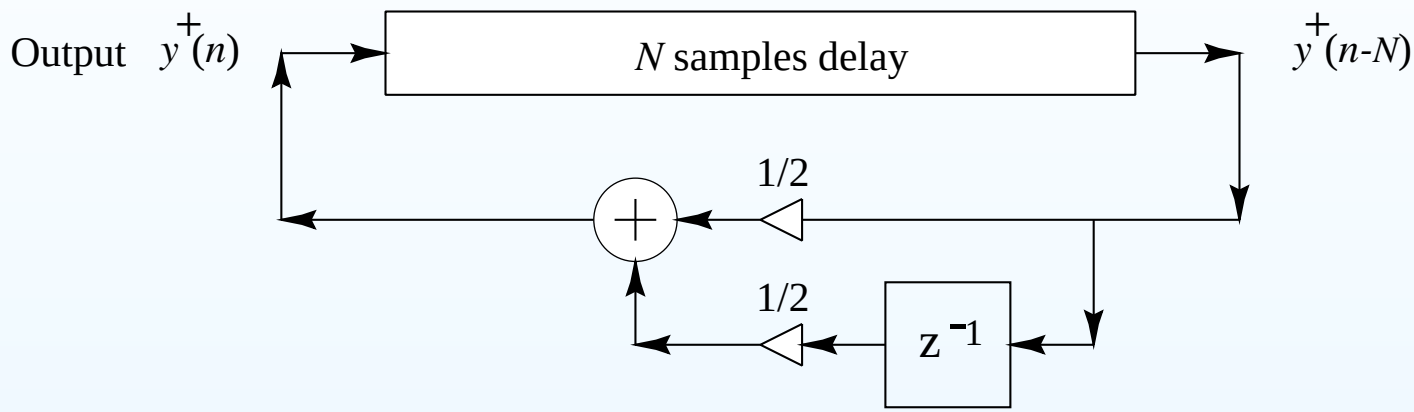

- Discovered (1978) as “self-modifying wavetable synthesis”
- Wavetable is preferably initialized with random numbers
- No physical modeling at this point

Overview
Early Voice Models
Digital Voice Models
Karplus Strong
Digital Waveguides
Single Reeds
Bowed Strings
Distortion Guitar
Commuted Synthesis
Digital Waveguide Mesh
Horn Filter Design
Finite Differences
Virtual Analog
Wave Digital Filters

Digital Waveguide Modeling

Overview
Early Voice Models
Digital Voice Models
Karplus Strong
Digital Waveguides
- Digital Waveguide
- Signal Scattering
- Moving Termination
- Waveguide Model
- Plucked String
- Struck String
- Damped String
- Commuted Gains
- Damping Filters
- Simplest Damping
- Karplus-Strong Aha
- EKS Algorithm
- Physical Excitation
- Pick Position FFCF
- PLPC Cello

Single Reeds
Bowed Strings
Distortion Guitar
Commuted Synthesis
Digital Waveguide Mesh

Digital Waveguide Models (1985)

Lossless digital waveguide $\triangleq$ *bidirectional delay line*

at some *wave impedance* R

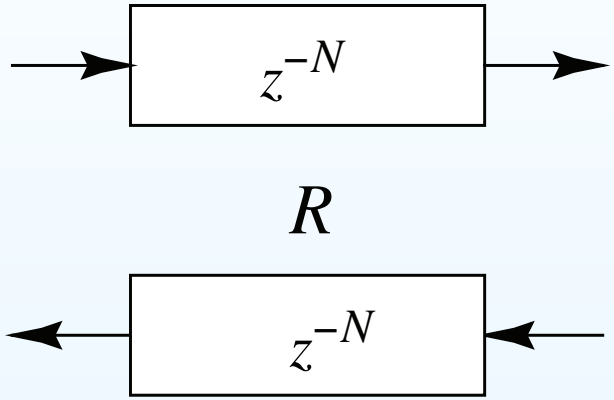

Useful for *efficient* models of

- strings
- bores
- plane waves
- conical waves

Overview
Early Voice Models
Digital Voice Models
Karplus Strong
Digital Waveguides
- Digital Waveguide
- Signal Scattering
- Moving Termination
- Waveguide Model
- Plucked String
- Struck String
- Damped String
- Commuted Gains
- Damping Filters
- Simplest Damping
- Karplus-Strong Aha
- EKS Algorithm
- Physical Excitation
- Pick Position FFCF
- PLPC Cello

Single Reeds
Bowed Strings
Distortion Guitar
Commuted Synthesis
Digital Waveguide Mesh

Signal Scattering

Signal *scattering* is caused by a *change* in wave impedance R:

$$k_1 = \frac{R_2 - R_1}{R_2 + R_1}$$

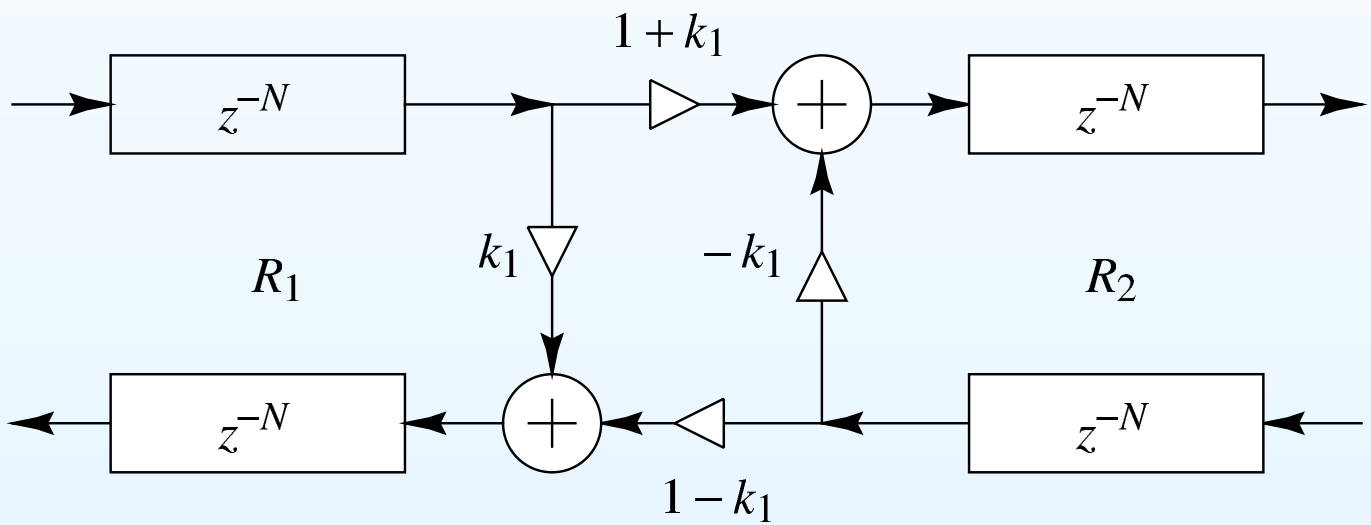

If the wave impedance changes *every spatial sample*, the Kelly-Lochbaum vocal-tract model results (also need reflecting terminations)

Overview
Early Voice Models
Digital Voice Models
Karplus Strong
Digital Waveguides
- Digital Waveguide
- Signal Scattering
- Moving Termination
- Waveguide Model
- Plucked String
- Struck String
- Damped String
- Commuted Gains
- Damping Filters
- Simplest Damping
- Karplus-Strong Aha
- EKS Algorithm
- Physical Excitation
- Pick Position FFCF
- PLPC Cello

Single Reeds
Bowed Strings
Distortion Guitar
Commuted Synthesis
Digital Waveguide Mesh

Moving Termination: Ideal String

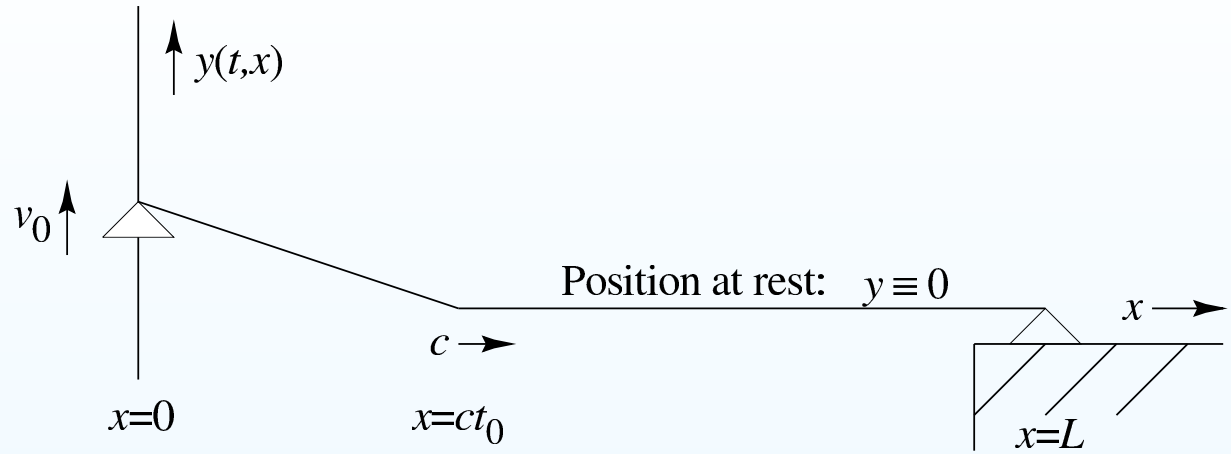

Moving rigid termination for an ideal string

- Left endpoint moved at velocity v_0
- External force $f_0 = Rv_0$
- $R = \sqrt{K\epsilon}$ is the *wave impedance* (for transverse waves)
- Relevant to *bowed strings* (when bow pulls string)
- String moves with speed v_0 or 0 only
- String is always one or two straight segments
- "Helmholtz corner" (slope discontinuity) shuttles back and forth at speed $c = \sqrt{K/\epsilon}$

Overview

Early Voice Models

Digital Voice Models

Karplus Strong

Digital Waveguides

- Digital Waveguide
- Signal Scattering
- Moving Termination
- Waveguide Model
- Plucked String
- Struck String
- Damped String
- Commuted Gains
- Damping Filters
- Simplest Damping
- Karplus-Strong Aha
- EKS Algorithm
- Physical Excitation
- Pick Position FFCF
- PLPC Cello

Single Reeds

Bowed Strings

Distortion Guitar

Commuted Synthesis

Digital Waveguide Mesh

Digital Waveguide "Equivalent Circuits"

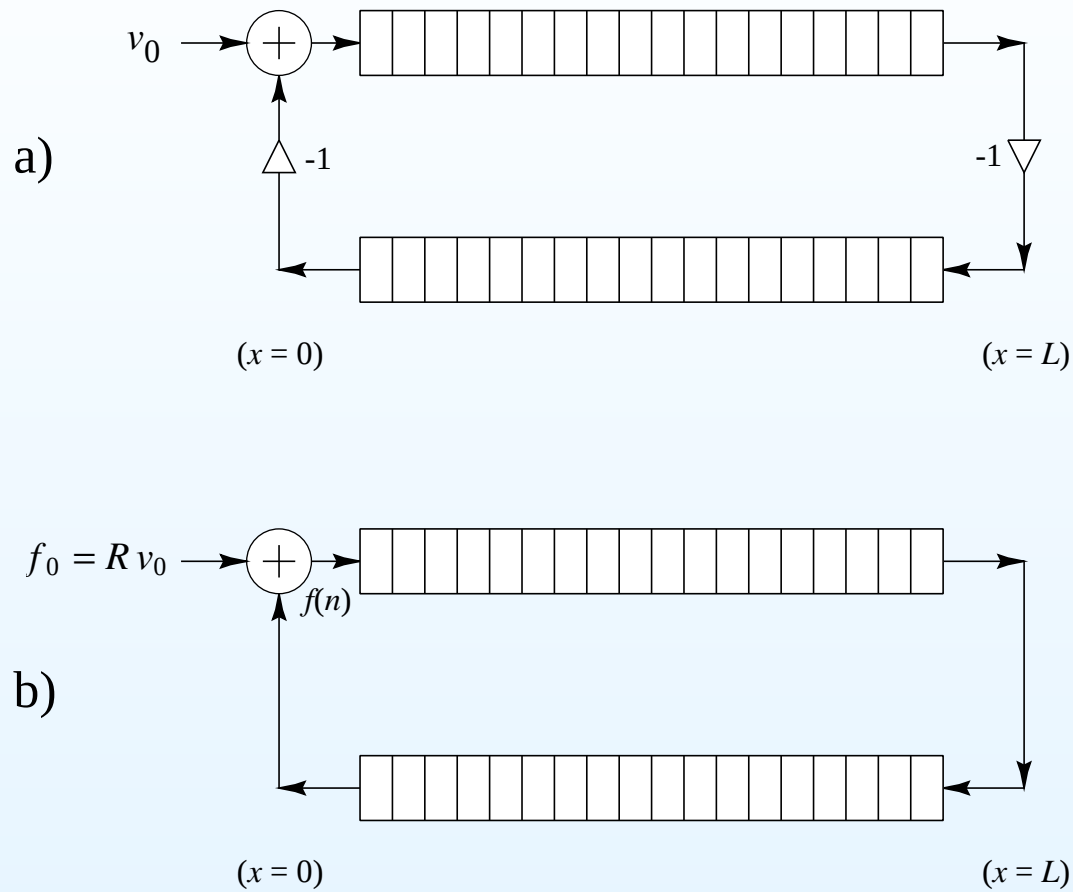

a) Velocity waves. b) Force waves.

(Animation)

(Interactive Animation)

Overview
Early Voice Models
Digital Voice Models
Karplus Strong
Digital Waveguides
- Digital Waveguide
- Signal Scattering
- Moving Termination
- Waveguide Model
- Plucked String
- Struck String
- Damped String
- Commuted Gains
- Damping Filters
- Simplest Damping
- Karplus-Strong Aha
- EKS Algorithm
- Physical Excitation
- Pick Position FFCF
- PLPC Cello

Single Reeds
Bowed Strings
Distortion Guitar
Commuted Synthesis
Digital Waveguide Mesh

Ideal Plucked String (Displacement Waves)

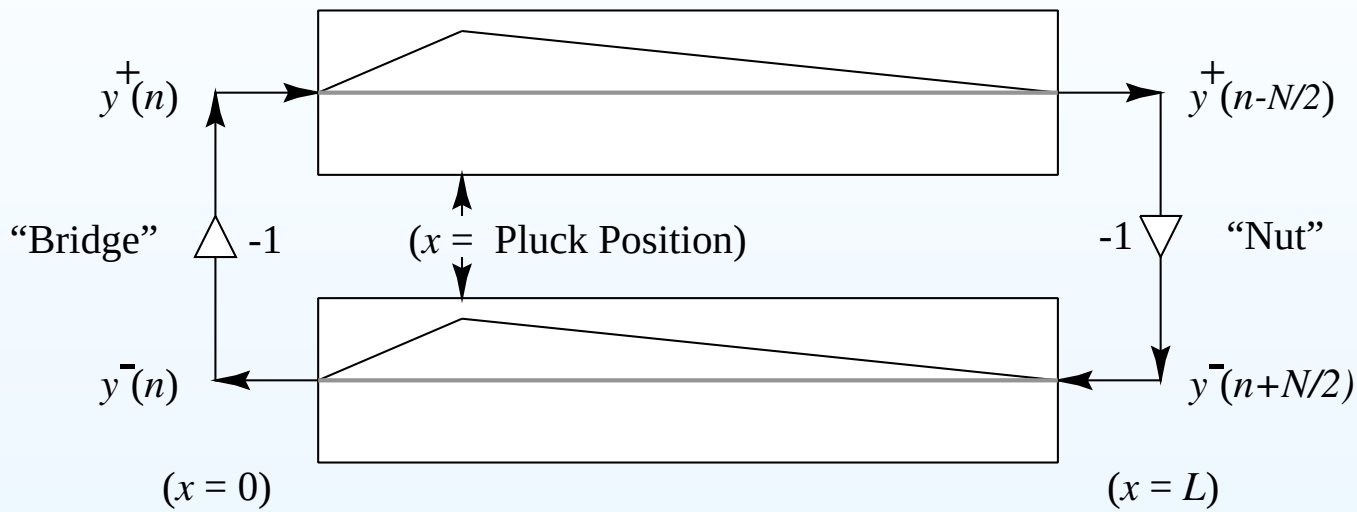

- Load each delay line with *half* of initial string displacement
- Sum of upper and lower delay lines = string displacement

Overview
Early Voice Models
Digital Voice Models
Karplus Strong
Digital Waveguides
- Digital Waveguide
- Signal Scattering
- Moving Termination
- Waveguide Model
- Plucked String
- Struck String
- Damped String
- Commuted Gains
- Damping Filters
- Simplest Damping
- Karplus-Strong Aha
- EKS Algorithm
- Physical Excitation
- Pick Position FFCF
- PLPC Cello

Single Reeds
Bowed Strings
Distortion Guitar
Commuted Synthesis
Digital Waveguide Mesh

Ideal Struck String (Velocity Waves)

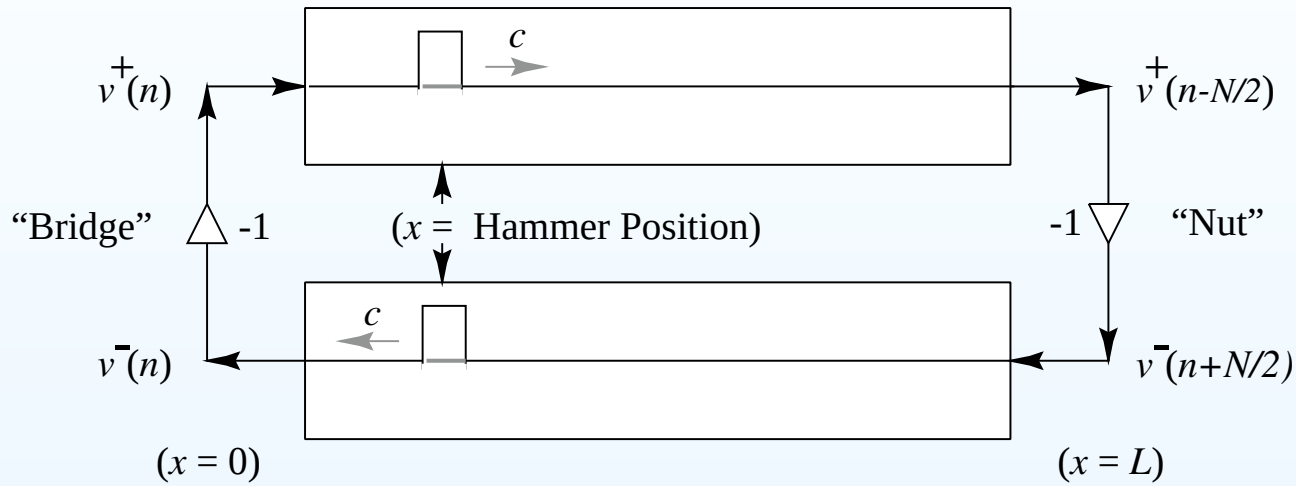

Hammer strike = *momentum transfer* = velocity step:

$$m_h v_h(0-) = (m_h + m_s) v_s(0+)$$

Overview
Early Voice Models
Digital Voice Models
Karplus Strong
Digital Waveguides
- Digital Waveguide
- Signal Scattering
- Moving Termination
- Waveguide Model
- Plucked String
- Struck String
- Damped String
- Commuted Gains
- Damping Filters
- Simplest Damping
- Karplus-Strong Aha
- EKS Algorithm
- Physical Excitation
- Pick Position FFCF
- PLPC Cello

Single Reeds
Bowed Strings
Distortion Guitar
Commuted Synthesis
Digital Waveguide Mesh

Digital Waveguide Interpretation of Karplus-Strong

Begin with an ideal *damped* string model:

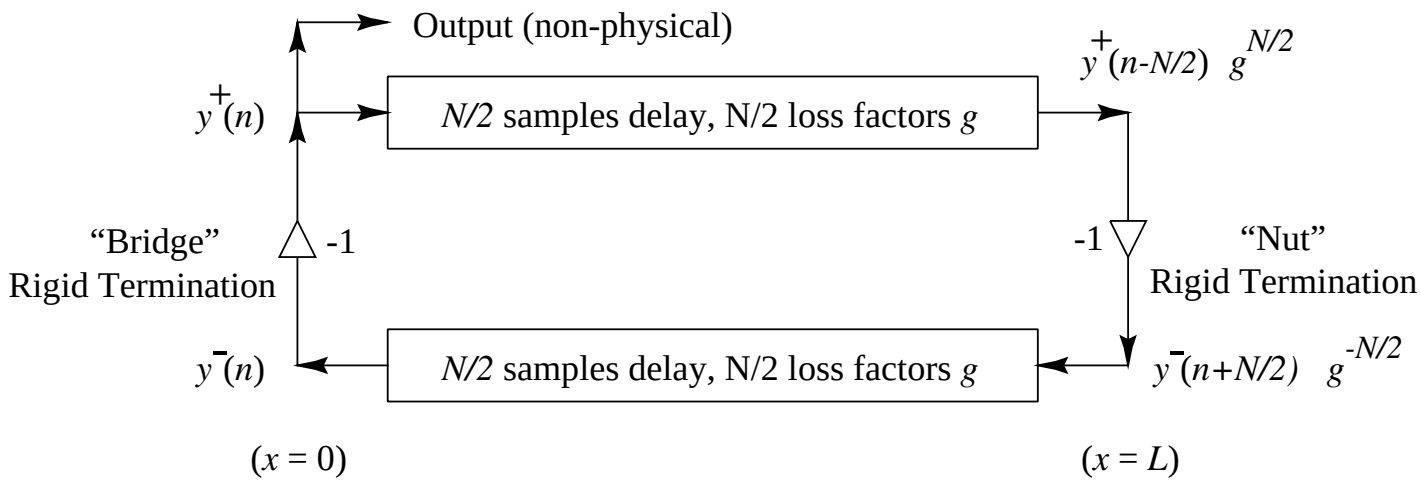

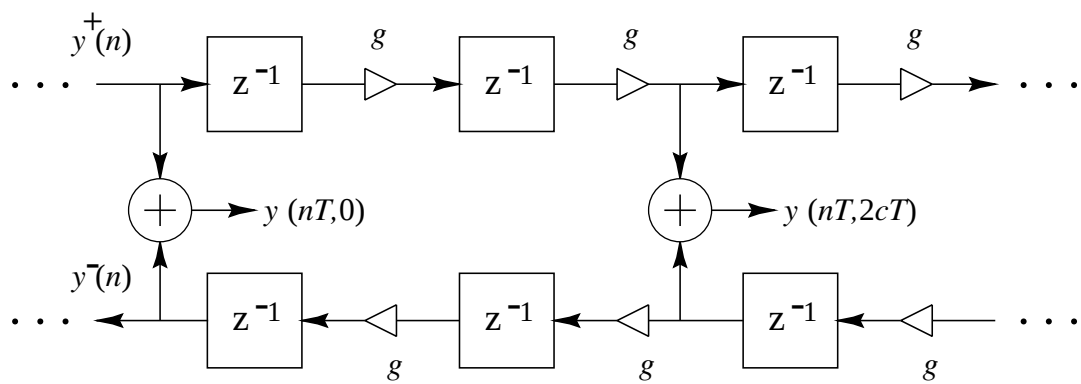

Overview
Early Voice Models
Digital Voice Models
Karplus Strong
Digital Waveguides
- Digital Waveguide
- Signal Scattering
- Moving Termination
- Waveguide Model
- Plucked String
- Struck String
- Damped String
- Commuted Gains
- Damping Filters
- Simplest Damping
- Karplus-Strong Aha
- EKS Algorithm
- Physical Excitation
- Pick Position FFCF
- PLPC Cello

Single Reeds
Bowed Strings
Distortion Guitar
Commuted Synthesis
Digital Waveguide Mesh

Equivalent System: Gain Elements Commuted

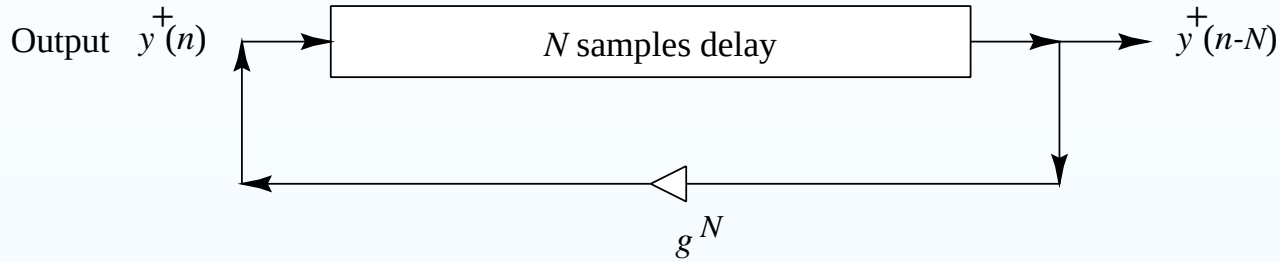

All N loss factors g have been "pushed" through delay elements and combined at a *single* point.

Computational Savings

- $f_s = 50$kHz, $f_1 = 100Hz \Rightarrow$ delay $= 500$
- Multiplies reduced by two orders of magnitude
- Input-output transfer function unchanged
- Round-off errors reduced

Overview
Early Voice Models
Digital Voice Models
Karplus Strong
Digital Waveguides
- Digital Waveguide
- Signal Scattering
- Moving Termination
- Waveguide Model
- Plucked String
- Struck String
- Damped String
- Commuted Gains
- Damping Filters
- Simplest Damping
- Karplus-Strong Aha
- EKS Algorithm
- Physical Excitation
- Pick Position FFCF
- PLPC Cello

Single Reeds
Bowed Strings
Distortion Guitar
Commuted Synthesis
Digital Waveguide Mesh

Frequency-Dependent Damping

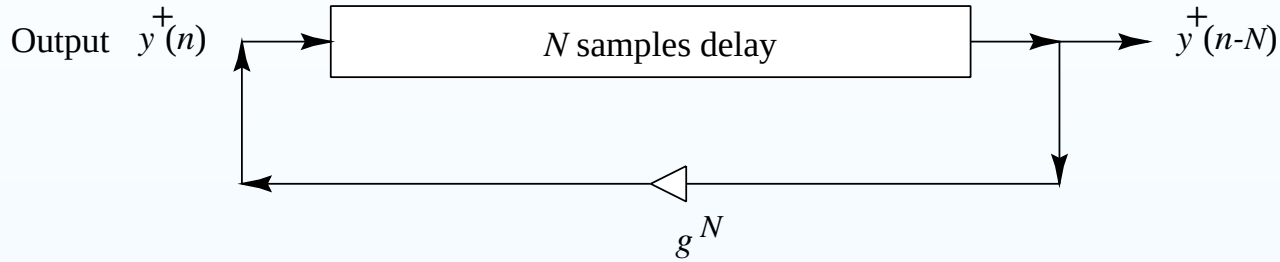

- Loss factors g should really be digital filters
- Gains in nature typically decrease with frequency
- Loop gain may not exceed 1 (for stability)
- Such filters *also commute* with delay elements (LTI)
- Typically only *one* gain filter used per loop

Overview

Early Voice Models

Digital Voice Models

Karplus Strong

Digital Waveguides

- Digital Waveguide
- Signal Scattering
- Moving Termination
- Waveguide Model
- Plucked String
- Struck String
- Damped String
- Commuted Gains
- Damping Filters
- Simplest Damping
- Karplus-Strong Aha
- EKS Algorithm
- Physical Excitation
- Pick Position FFCF
- PLPC Cello

Single Reeds

Bowed Strings

Distortion Guitar

Commuted Synthesis

Digital Waveguide Mesh

Simplest Frequency-Dependent Loop Filter

$$\boxed{\hat{G}(z) = b_0 + b_1 z^{-1}}$$

- Uniform delay $\Rightarrow b_0 = b_1$ ($\Rightarrow$ delay = 1/2 sample)

- Zero damping at dc $\Rightarrow b_0 + b_1 = 1$
  $\Rightarrow b_0 = b_1 = 1/2$
  $\Rightarrow$
  $$\boxed{\hat{G}(e^{j\omega T}) = \cos(\omega T/2), \quad |\omega| \leq \pi f_s}$$

- This is precisely the Karplus-Strong loop filter!

Overview
Early Voice Models
Digital Voice Models
Karplus Strong
Digital Waveguides
- Digital Waveguide
- Signal Scattering
- Moving Termination
- Waveguide Model
- Plucked String
- Struck String
- Damped String
- Commuted Gains
- Damping Filters
- Simplest Damping
- Karplus-Strong Aha
- EKS Algorithm
- Physical Excitation
- Pick Position FFCF
- PLPC Cello

Single Reeds
Bowed Strings
Distortion Guitar
Commuted Synthesis
Digital Waveguide Mesh

Karplus-Strong Algorithm Revisited

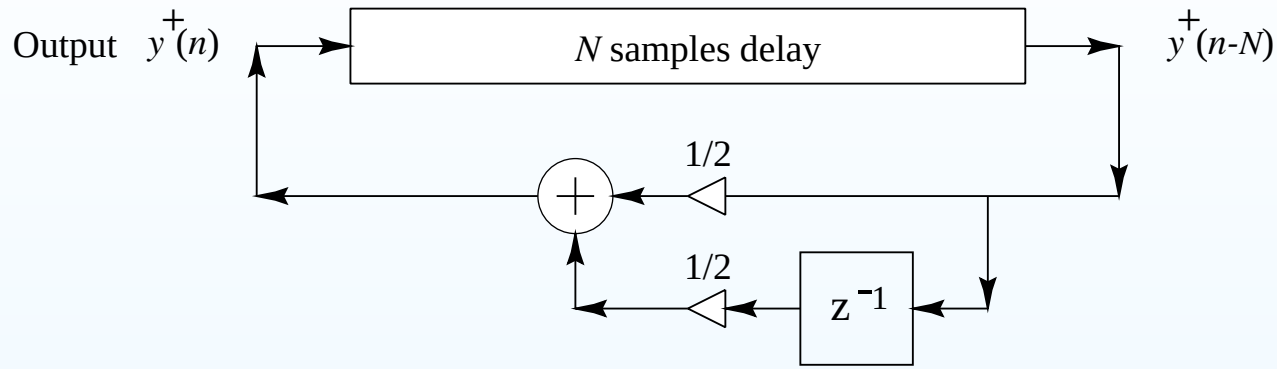

Physical Interpretation

- Delay line is initialized with *noise* (random numbers)
- Therefore, assuming a *displacement-wave* simulation:
  - Initial string *displacement* = *sum* of delay-line halves
  - Initial string *velocity* $\Leftarrow$ *difference* of delay-line halves
- The Karplus-Strong "string" is thus *plucked and struck* by random amounts along the *entire length of the string!* ("splucked string"?)

Overview

Early Voice Models

Digital Voice Models

Karplus Strong

Digital Waveguides
- Digital Waveguide
- Signal Scattering
- Moving Termination
- Waveguide Model
- Plucked String
- Struck String
- Damped String
- Commuted Gains
- Damping Filters
- Simplest Damping
- Karplus-Strong Aha
- EKS Algorithm
- Physical Excitation
- Pick Position FFCF
- PLPC Cello

Single Reeds

Bowed Strings

Distortion Guitar

Commuted Synthesis

Digital Waveguide Mesh

EKS Algorithm (Jaffe-Smith 1983)

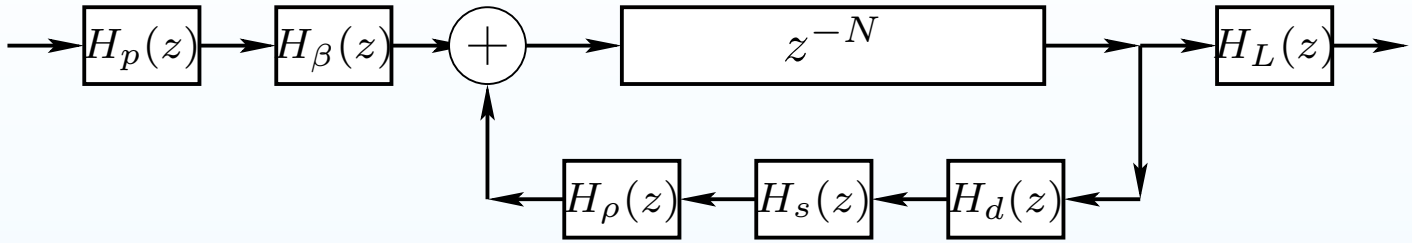

$$
\begin{aligned}
N &= \text{pitch period } (2\times \text{ string length}) \text{ in samples} \\
H_p(z) &= \frac{1-p}{1-p\,z^{-1}} = \text{pick-direction lowpass filter} \\
H_\beta(z) &= 1 - z^{-\beta N} = \text{pick-position comb filter, } \beta \in (0,1) \\
H_d(z) &= \text{string-damping filter (one/two poles/zeros typical)} \\
H_s(z) &= \text{string-stiffness allpass filter (several poles and zeros)} \\
H_\rho(z) &= \frac{\rho(N) - z^{-1}}{1-\rho(N)\,z^{-1}} = \text{first-order string-tuning allpass filter} \\
H_L(z) &= \frac{1-R_L}{1-R_L\,z^{-1}} = \text{dynamic-level lowpass filter}
\end{aligned}
$$

Overview
Early Voice Models
Digital Voice Models
Karplus Strong
Digital Waveguides
- Digital Waveguide
- Signal Scattering
- Moving Termination
- Waveguide Model
- Plucked String
- Struck String
- Damped String
- Commuted Gains
- Damping Filters
- Simplest Damping
- Karplus-Strong Aha
- EKS Algorithm
- Physical Excitation
- Pick Position FFCF
- PLPC Cello

Single Reeds
Bowed Strings
Distortion Guitar
Commuted Synthesis
Digital Waveguide Mesh

Karplus-Strong Sound Examples

- "Vintage" 8-bit sound examples:
  - Original Plucked String: (WAV) (MP3)
  - Drum: (WAV) (MP3)
  - Stretched Drum: (WAV) (MP3)

Overview

Early Voice Models

Digital Voice Models

Karplus Strong

Digital Waveguides

- Digital Waveguide
- Signal Scattering
- Moving Termination
- Waveguide Model
- Plucked String
- Struck String
- Damped String
- Commuted Gains
- Damping Filters
- Simplest Damping
- Karplus-Strong Aha
- EKS Algorithm
- Physical Excitation
- Pick Position FFCF
- PLPC Cello

Single Reeds

Bowed Strings

Distortion Guitar

Commuted Synthesis

Digital Waveguide Mesh

EKS Sound Examples

Plucked String: (WAV) (MP3)

- Plucked String 1: (WAV) (MP3)
- Plucked String 2: (WAV) (MP3)
- Plucked String 3: (WAV) (MP3)

(Computed using `Plucked.cpp` in the C++ Synthesis Tool Kit (STK) by Perry Cook and Gary Scavone)

Overview
Early Voice Models
Digital Voice Models
Karplus Strong
Digital Waveguides
- Digital Waveguide
- Signal Scattering
- Moving Termination
- Waveguide Model
- Plucked String
- Struck String
- Damped String
- Commuted Gains
- Damping Filters
- Simplest Damping
- Karplus-Strong Aha
- EKS Algorithm
- Physical Excitation
- Pick Position FFCF
- PLPC Cello

Single Reeds
Bowed Strings
Distortion Guitar
Commuted Synthesis
Digital Waveguide Mesh

EKS Sound Example (1988)

Bach A-Minor Concerto—Orchestra Part: (WAV) (MP3)

- Executed in real time on one Motorola DSP56001 (20 MHz clock, 128K SRAM)
- Developed for the NeXT Computer introduction at Davies Symphony Hall, San Francisco, 1988
- Solo violin part was played live by Dan Kobialka of the San Francisco Symphony

Overview
Early Voice Models
Digital Voice Models
Karplus Strong
Digital Waveguides
- Digital Waveguide
- Signal Scattering
- Moving Termination
- Waveguide Model
- Plucked String
- Struck String
- Damped String
- Commuted Gains
- Damping Filters
- Simplest Damping
- Karplus-Strong Aha
- EKS Algorithm
- Physical Excitation
- Pick Position FFCF
- PLPC Cello

Single Reeds
Bowed Strings
Distortion Guitar
Commuted Synthesis
Digital Waveguide Mesh

Example EKS Extension

Several of the Karplus-Strong algorithm extensions were based on its *physical interpretation*.

- Originally, transfer-function methods were used (1982)
- Later, *digital waveguide* methods were used (1986)

Overview
Early Voice Models
Digital Voice Models
Karplus Strong
Digital Waveguides
- Digital Waveguide
- Signal Scattering
- Moving Termination
- Waveguide Model
- Plucked String
- Struck String
- Damped String
- Commuted Gains
- Damping Filters
- Simplest Damping
- Karplus-Strong Aha
- EKS Algorithm
- Physical Excitation
- Pick Position FFCF
- PLPC Cello

Single Reeds
Bowed Strings
Distortion Guitar
Commuted Synthesis
Digital Waveguide Mesh

String Excited Externally at One Point

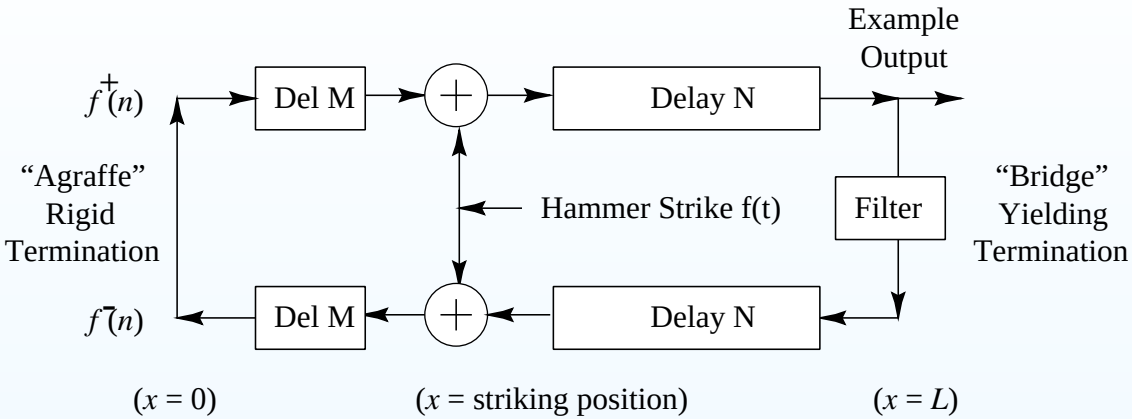

"Waveguide Canonical Form (1986)"

Equivalent System by Delay Consolidation:

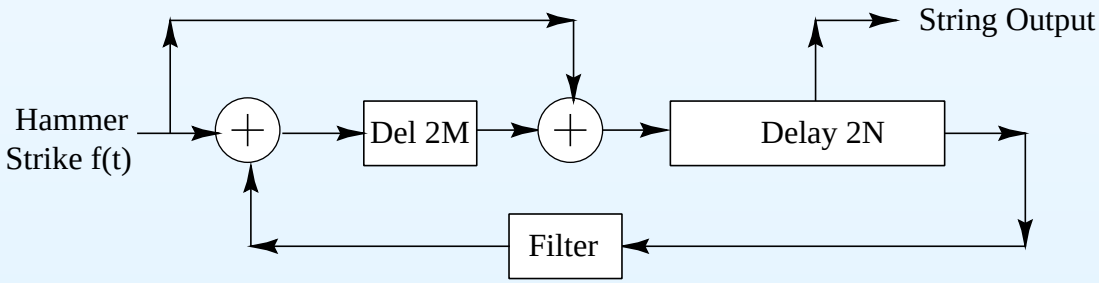

Finally, we "pull out" the comb-filter component:

Overview
Early Voice Models
Digital Voice Models
Karplus Strong
Digital Waveguides
- Digital Waveguide
- Signal Scattering
- Moving Termination
- Waveguide Model
- Plucked String
- Struck String
- Damped String
- Commuted Gains
- Damping Filters
- Simplest Damping
- Karplus-Strong Aha
- EKS Algorithm
- Physical Excitation
- Pick Position FFCF
- PLPC Cello

Single Reeds
Bowed Strings
Distortion Guitar
Commuted Synthesis
Digital Waveguide Mesh

EKS "Pick Position" Extension

Equivalent System: Comb Filter Factored Out

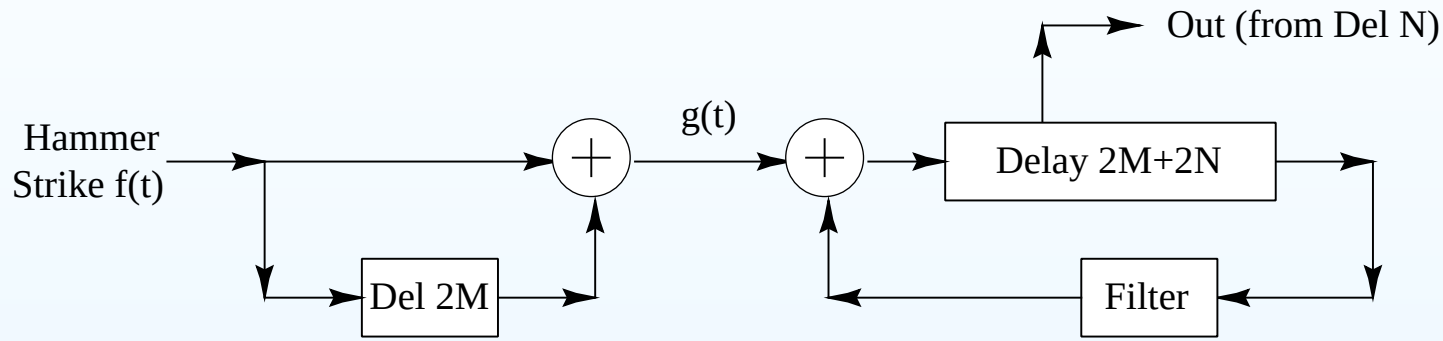

$$H(z) = z^{-N}\frac{1+z^{-2M}}{1-z^{-(2M+2N)}} = \left(1+z^{-2M}\right)\frac{z^{-N}}{1-z^{-(2M+2N)}}$$

- *Excitation Position* controlled by left delay-line length
- *Fundamental Frequency* controlled by right delay-line length
- "Transfer function modeling" based on a physical model (1982)

PLPC Cello (1982)

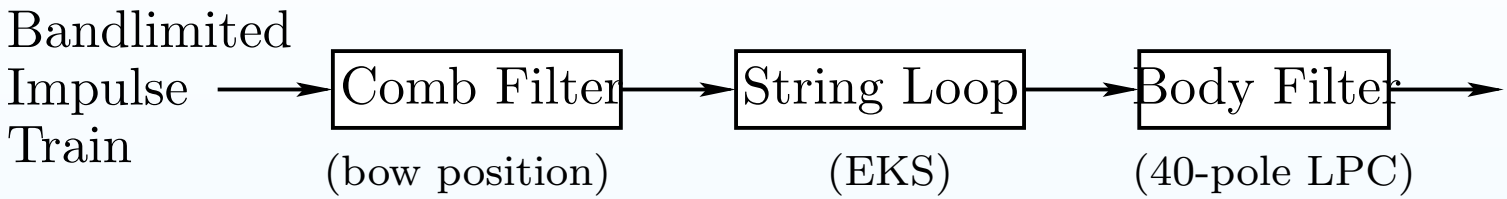

- Periodic LPC used to estimate string-loop filter
- Normal LPC used for body model (40 poles)
- Excitation = Bandlimited impulse train (Moorer 1975):

$$\sum_{k=1}^{K} \cos(k\omega_0 t) = \frac{\sin[(K+1/2)\omega_0 t]}{2\sin(\omega_0 t/2)} - \frac{1}{2}$$

- Bow-position simulation = variable-delay differencing comb filter (direct from physical interpretation)
- **Sound Example:**
  Moving Bow-Stroke Example: (WAV) (MP3)
  (Bowing point moves toward the “bridge”)

Overview
Early Voice Models
Digital Voice Models
Karplus Strong
Digital Waveguides
Single Reeds
Bowed Strings
Distortion Guitar
Commuted Synthesis
Digital Waveguide Mesh
Horn Filter Design
Finite Differences
Virtual Analog
Wave Digital Filters

Single-Reed Instruments

Overview
Early Voice Models
Digital Voice Models
Karplus Strong
Digital Waveguides
Single Reeds
- Schematic Model
- Waveguide Model
- Simplified Reed
- Reed Computation
- Graphical Solver
- Example
- Clarinet
- Wind Examples

Bowed Strings
Distortion Guitar
Commuted Synthesis
Digital Waveguide Mesh
Horn Filter Design
Finite Differences
Virtual Analog
Wave Digital Filters

Schematic Physical Model

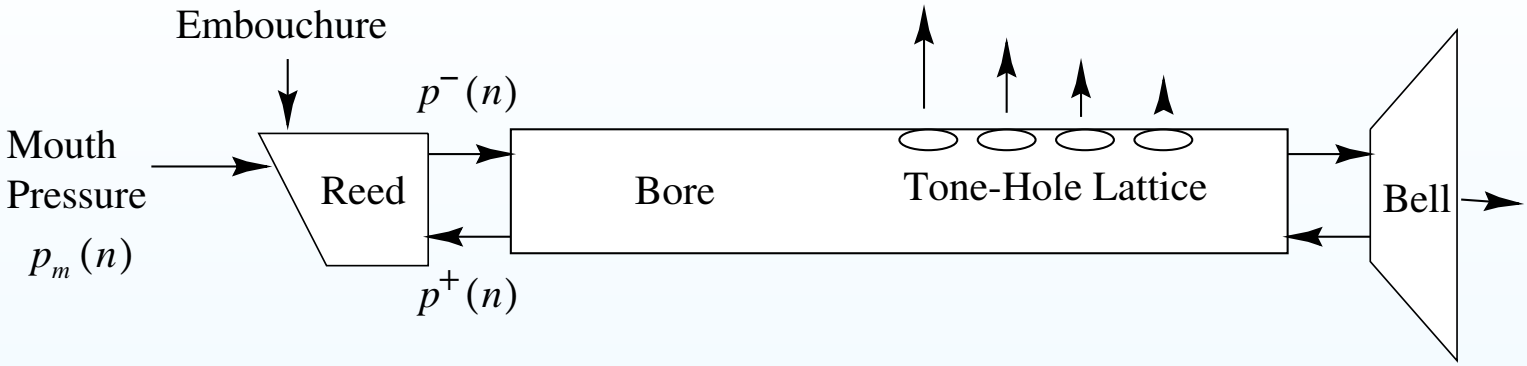

- Main control variable = air pressure applied to reed
- Secondary control variable = reed embouchure
- Pressure waves = natural choice for simulation
- Radiation ≈ "Omni" at LF, more directional at HF

Bell ≈ power-complementary "cross-over" filter:

- Low frequencies reflect (inverted)
- High frequencies transmit
- Cross-over frequency ≈ 1500 Hz for clarinet (where wavelength ≈ bore diameter)

Overview
Early Voice Models
Digital Voice Models
Karplus Strong
Digital Waveguides
Single Reeds
- Schematic Model
- Waveguide Model
- Simplified Reed
- Reed Computation
- Graphical Solver
- Example
- Clarinet
- Wind Examples

Bowed Strings
Distortion Guitar
Commuted Synthesis
Digital Waveguide Mesh
Horn Filter Design
Finite Differences
Virtual Analog
Wave Digital Filters

Single-Reed Digital Waveguide Model (1986)

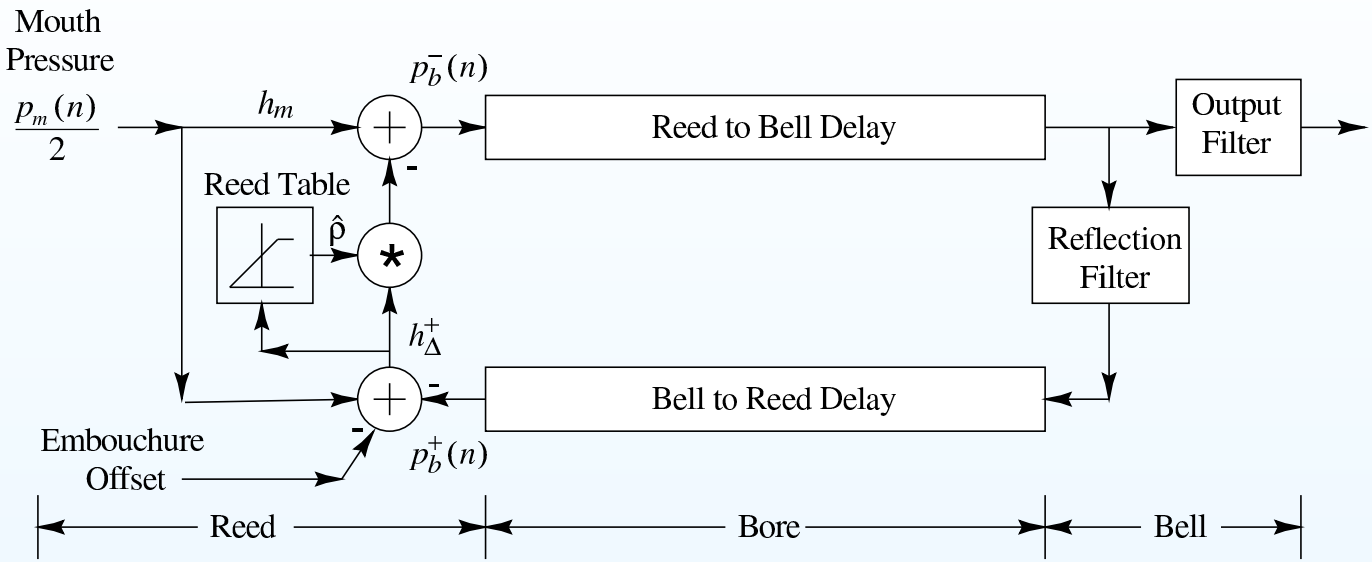

- Bore = bidirectional delay line (losses lumped)
- Bore length = 1/4 wavelength in lowest register
  - Bell reflection ≈ -1 at low frequencies
  - Mouthpiece reflection ≈ +1
- Reflection filter depends on first few open toneholes
- In a simple implementation, the bore is “cut to a new length” for each pitch

Overview
Early Voice Models
Digital Voice Models
Karplus Strong
Digital Waveguides
Single Reeds
- Schematic Model
- Waveguide Model
- Simplified Reed
- Reed Computation
- Graphical Solver
- Example
- Clarinet
- Wind Examples

Bowed Strings
Distortion Guitar
Commuted Synthesis
Digital Waveguide Mesh
Horn Filter Design
Finite Differences
Virtual Analog
Wave Digital Filters

Simplified Single-Reed Theory

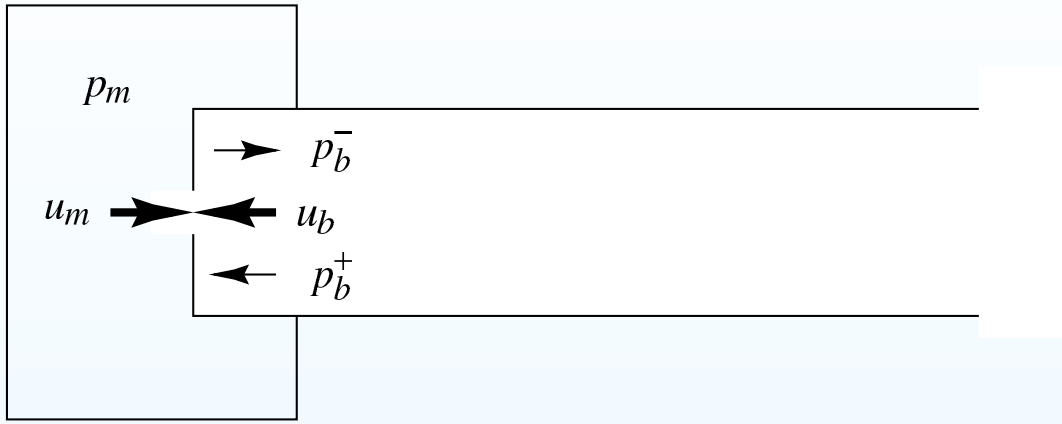

$$p_m \triangleq \text{mouth pressure (constant)}$$

$$p_b \triangleq \text{bore pressure (dynamic)}$$

$$p_\Delta \triangleq p_m - p_b \triangleq \text{pressure drop across mouthpiece}$$

$$u_m \triangleq \text{resulting flow into mouthpiece}$$

$$R_m(p_\Delta) \triangleq \text{reed-aperture impedance (measured)}$$

Overview
Early Voice Models
Digital Voice Models
Karplus Strong
Digital Waveguides
Single Reeds
- Schematic Model
- Waveguide Model
- Simplified Reed
- Reed Computation
- Graphical Solver
- Example
- Clarinet
- Wind Examples

Bowed Strings
Distortion Guitar
Commuted Synthesis
Digital Waveguide Mesh
Horn Filter Design
Finite Differences
Virtual Analog
Wave Digital Filters

Toward a Computational Reed Model

Given:

$$\begin{aligned} p_m &= \text{Mouth pressure} \\ p_b^+ &= \text{Incoming traveling bore pressure} \end{aligned}$$

Find:

$$p_b^- = \text{Outgoing traveling bore pressure}$$

such that:

$$\begin{aligned} 0 &= u_m + u_b = \frac{p_\Delta}{R_m(p_\Delta)} + \frac{p_b^+ - p_b^-}{R_b}, \\ p_\Delta &\stackrel{\Delta}{=} p_m - p_b = p_m - (p_b^+ + p_b^-) \end{aligned}$$

Solving for p_b^- is not immediate because R_m depends on p_Δ which depends on p_b^-.

Overview
Early Voice Models
Digital Voice Models
Karplus Strong
Digital Waveguides
Single Reeds
- Schematic Model
- Waveguide Model
- Simplified Reed
- Reed Computation
- Graphical Solver
- Example
- Clarinet
- Wind Examples

Bowed Strings
Distortion Guitar
Commuted Synthesis
Digital Waveguide Mesh
Horn Filter Design
Finite Differences
Virtual Analog
Wave Digital Filters

Graphical Solution Technique (1983)

Graphically solve:

$$G(p_\Delta) = p_\Delta^+ - p_\Delta, \qquad p_\Delta^+ \stackrel{\Delta}{=} p_m - 2p_b^+$$

where

$$G(p_\Delta) \stackrel{\Delta}{=} R_b\, u_m(p_\Delta) = R_b\, p_\Delta / R_m(p_\Delta)$$

- Analogous to finding the "operating point" of a transistor by intersecting its "operating curve" with the "load line" determined by the load resistance.
- Outgoing wave is then $p_b^- = p_m - p_b^+ - p_\Delta(p_\Delta^+)$

Overview
Early Voice Models
Digital Voice Models
Karplus Strong
Digital Waveguides
Single Reeds
- Schematic Model
- Waveguide Model
- Simplified Reed
- Reed Computation
- Graphical Solver
- Example
- Clarinet
- Wind Examples

Bowed Strings
Distortion Guitar
Commuted Synthesis
Digital Waveguide Mesh
Horn Filter Design
Finite Differences
Virtual Analog
Wave Digital Filters

Graphical Solution Technique Illustrated

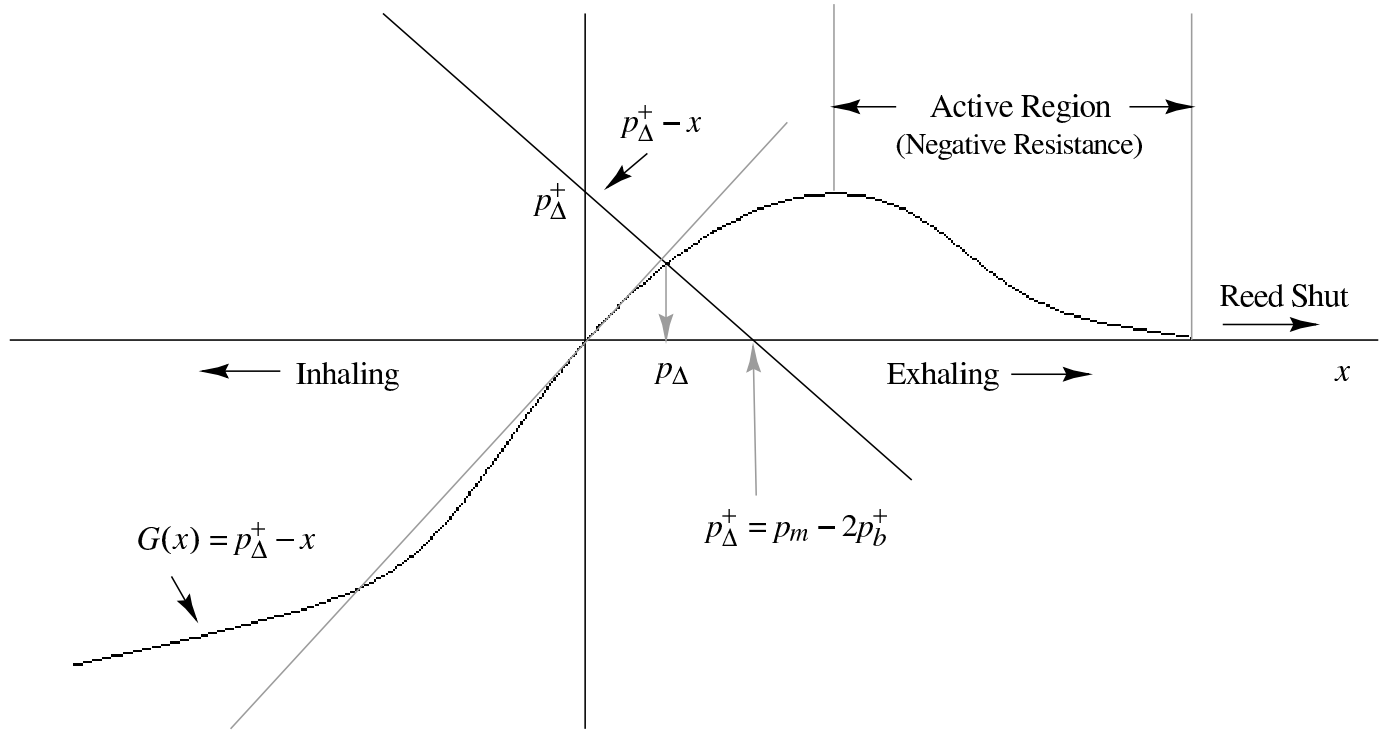

Iteratively solve:

$$p_\Delta^+ - p_\Delta = R_b\, p_\Delta / R_m(p_\Delta), \qquad \text{where } p_\Delta^+ \stackrel{\Delta}{=} p_m - 2p_b^+$$

Solution can be **pre-computed** and stored in a look-up table $\rho(p_\Delta^+)$

Overview
Early Voice Models
Digital Voice Models
Karplus Strong
Digital Waveguides
Single Reeds
- Schematic Model
- Waveguide Model
- Simplified Reed
- Reed Computation
- Graphical Solver
- Example
- Clarinet
- Wind Examples

Bowed Strings
Distortion Guitar
Commuted Synthesis
Digital Waveguide Mesh
Horn Filter Design
Finite Differences
Virtual Analog
Wave Digital Filters

Digital Waveguide Single Reed, Cylindrical Bore Model (1986)

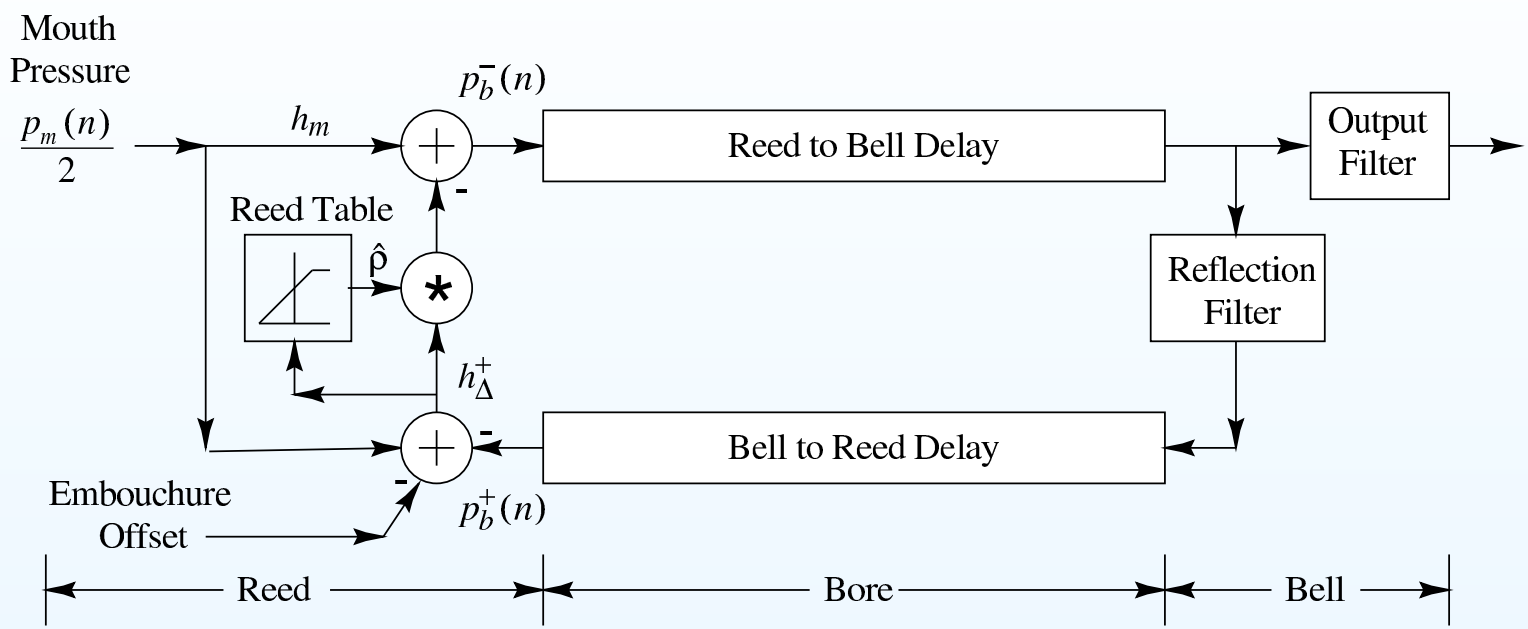

Digital waveguide clarinet

- Control variable = mouth half-pressure
- Total reed cost = two subtractions, one multiply, and one table lookup per sample

Overview
Early Voice Models
Digital Voice Models
Karplus Strong
Digital Waveguides
Single Reeds
- Schematic Model
- Waveguide Model
- Simplified Reed
- Reed Computation
- Graphical Solver
- Example
- Clarinet
- Wind Examples

Bowed Strings
Distortion Guitar
Commuted Synthesis
Digital Waveguide Mesh
Horn Filter Design
Finite Differences
Virtual Analog
Wave Digital Filters

Digital Waveguide Wind Instrument Sound Examples

- STK Clarinet: (WAV) (MP3)
  `Google` search: *STK clarinet*
- See also Faust-STK Clarinet (new)
- Staccato Systems Slide Flute
  (based on STK flute, ca. 1995): (WAV) (MP3)
- Yamaha VL1 “Virtual Lead” synthesizer demos (1994):
  - Shakuhachi: (WAV) (MP3)
  - Oboe and Bassoon: (WAV) (MP3)
  - Tenor Saxophone: (WAV) (MP3)

Overview
Early Voice Models
Digital Voice Models
Karplus Strong
Digital Waveguides
Single Reeds
Bowed Strings
Distortion Guitar
Commuted Synthesis
Digital Waveguide Mesh
Horn Filter Design
Finite Differences
Virtual Analog
Wave Digital Filters

Bowed Strings

Overview
Early Voice Models
Digital Voice Models
Karplus Strong
Digital Waveguides
Single Reeds
Bowed Strings
- Schematic Model
- Bow-String Contact
- Bow-String Junction
- Bow-String Reflection
- Simplified Bow Table
- Bowed Strings

Distortion Guitar
Commuted Synthesis
Digital Waveguide Mesh
Horn Filter Design
Finite Differences
Virtual Analog
Wave Digital Filters

Schematic Physical Model

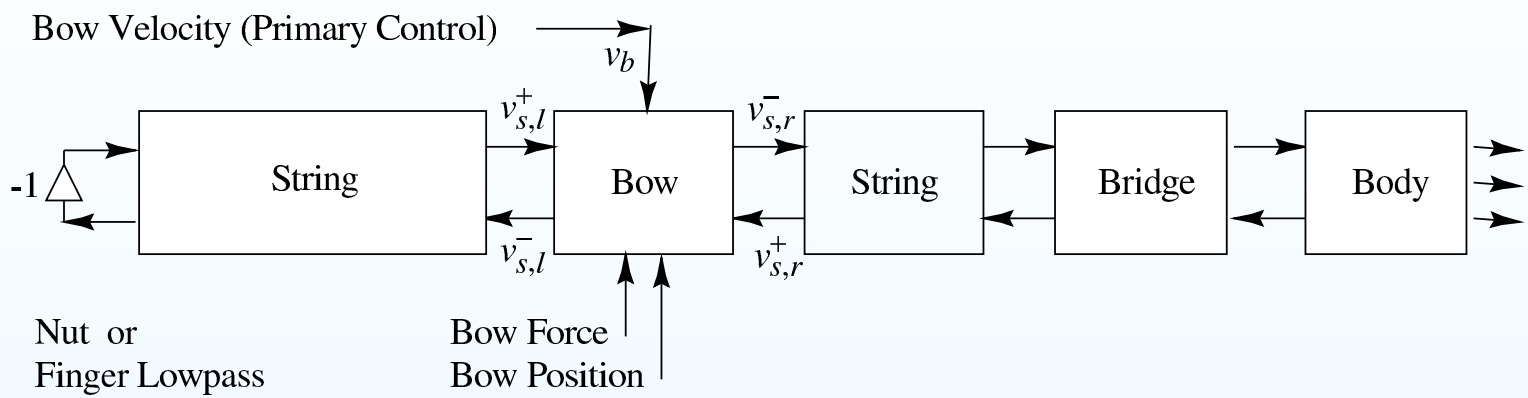

A schematic model for bowed-string instruments.

- Bow divides string into two sections
- Primary control variable = bow velocity
  $\Rightarrow$ *velocity waves* = natural choice of wave variable
- Bow junction = nonlinear *two-port*
- Must find velocity input to string (injected equally to left and right) such that *friction force = string reaction force*.

Overview

Early Voice Models

Digital Voice Models

Karplus Strong

Digital Waveguides

Single Reeds

Bowed Strings

- Schematic Model
- Bow-String Contact
- Bow-String Junction
- Bow-String Reflection
- Simplified Bow Table
- Bowed Strings

Distortion Guitar

Commuted Synthesis

Digital Waveguide Mesh

Horn Filter Design

Finite Differences

Virtual Analog

Wave Digital Filters

Bow-String Contact Physics

$$\begin{array}{rcl} \text{Applied Force} & = & \text{Friction Curve} \times \text{Differential Velocity} \\ \| & & \\ \text{Reaction Force} & = & \text{String Wave Impedance} \times \text{Velocity Change} \end{array}$$

Overview
Early Voice Models
Digital Voice Models
Karplus Strong
Digital Waveguides
Single Reeds
Bowed Strings
- Schematic Model
- Bow-String Contact
- Bow-String Junction
- Bow-String Reflection
- Simplified Bow Table
- Bowed Strings

Distortion Guitar
Commuted Synthesis
Digital Waveguide Mesh
Horn Filter Design
Finite Differences
Virtual Analog
Wave Digital Filters

Friedlander-Keller

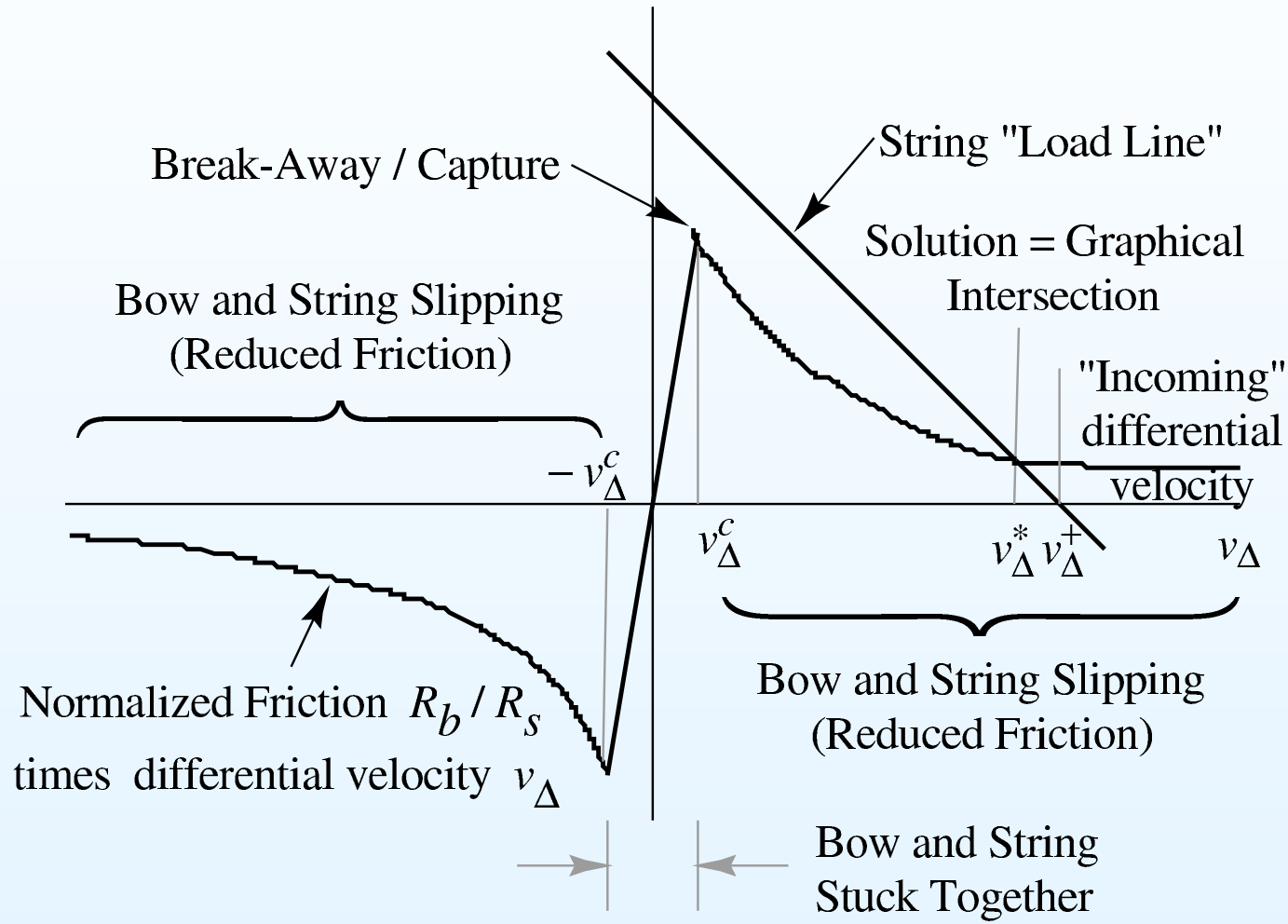

Overlay of normalized bow-string friction curve $R_b(v_\Delta)/R_s$ with the string "load line" $v_\Delta^+ - v_\Delta$.

Overview
Early Voice Models
Digital Voice Models
Karplus Strong
Digital Waveguides
Single Reeds
Bowed Strings
- Schematic Model
- Bow-String Contact
- Bow-String Junction
- Bow-String Reflection
- Simplified Bow Table
- Bowed Strings

Distortion Guitar
Commuted Synthesis
Digital Waveguide Mesh
Horn Filter Design
Finite Differences
Virtual Analog
Wave Digital Filters

Bow-String Scattering Junction

Friedlander-Keller diagram is solved when

$$R_b(v_\Delta) \cdot v_\Delta = R_s \cdot \left[v_\Delta^+ - v_\Delta\right]$$

which implies

$$\begin{aligned} v_{s,r}^- &= v_{s,l}^+ + \hat{\rho}(v_\Delta^+) \cdot v_\Delta^+ \\ v_{s,l}^- &= v_{s,r}^+ + \hat{\rho}(v_\Delta^+) \cdot v_\Delta^+ \end{aligned}$$

where

$$\begin{aligned} v_{s,r} &= \text{transverse string velocity on the } \textit{right} \text{ of the bow} \\ v_{s,l} &= \text{string velocity } \textit{left} \text{ of the bow } (v_{s,l} = v_{s,r}) \\ v_\Delta^+ &\stackrel{\Delta}{=} v_b - (v_{s,r}^+ + v_{s,l}^+) = \text{“incoming differential velocity”} \\ v_b &= \text{bow velocity, and } \hat{\rho}(v_\Delta^+) \text{ is given by} \ldots \end{aligned}$$

Overview
Early Voice Models
Digital Voice Models
Karplus Strong
Digital Waveguides
Single Reeds
Bowed Strings
- Schematic Model
- Bow-String Contact
- Bow-String Junction
- Bow-String Reflection
- Simplified Bow Table
- Bowed Strings

Distortion Guitar
Commuted Synthesis
Digital Waveguide Mesh
Horn Filter Design
Finite Differences
Virtual Analog
Wave Digital Filters

Bow-String Reflection Coefficient

$$\boxed{\hat{\rho}(v_\Delta^+) = \frac{r\left(v_\Delta(v_\Delta^+)\right)}{1 + r\left(v_\Delta(v_\Delta^+)\right)}} \quad \text{where}$$

$$\begin{aligned}
r(v_\Delta) &= 0.25 R_b(v_\Delta)/R_s \\
v_\Delta &= v_b - v_s \qquad \text{bow velocity minus string velocity} \\
v_s &= v_{s,l}^+ + v_{s,l}^- = v_{s,r}^+ + v_{s,r}^- = \text{transverse string velocity} \\
R_s &= \text{wave impedance of string} \\
R_b(v_\Delta) &= \text{friction coefficient for the bow against the string, i.e.,} \\
& \quad F_b(v_\Delta) = R_b(v_\Delta) \cdot v_\Delta
\end{aligned}$$

Overview
Early Voice Models
Digital Voice Models
Karplus Strong
Digital Waveguides
Single Reeds
Bowed Strings
- Schematic Model
- Bow-String Contact
- Bow-String Junction
- Bow-String Reflection
- Simplified Bow Table
- Bowed Strings

Distortion Guitar
Commuted Synthesis
Digital Waveguide Mesh
Horn Filter Design
Finite Differences
Virtual Analog
Wave Digital Filters

Simplified, Piecewise Linear Bow Table

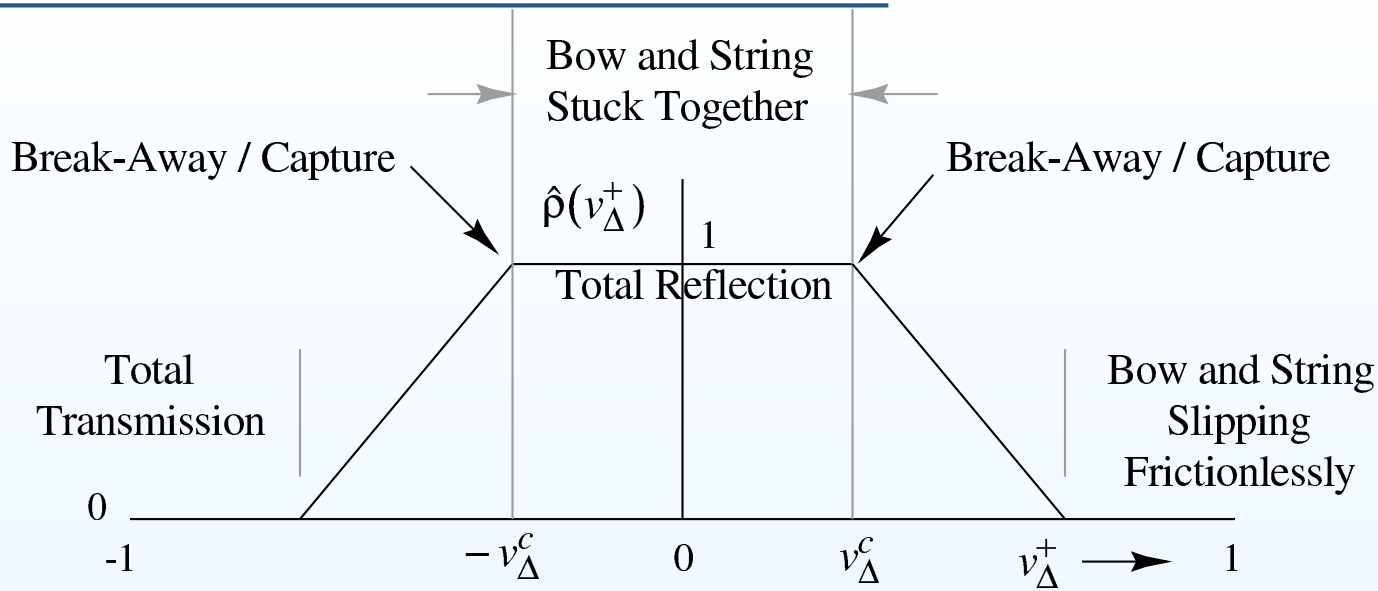

- Flat center portion corresponds to a fixed reflection coefficient "seen" by a traveling wave encountering the bow stuck against the string
- Outer sections give a smaller reflection coefficient corresponding to the reduced bow-string interaction force while the string is slipping under the bow
- Hysteresis is neglected

Overview
Early Voice Models
Digital Voice Models
Karplus Strong
Digital Waveguides
Single Reeds
Bowed Strings
- Schematic Model
- Bow-String Contact
- Bow-String Junction
- Bow-String Reflection
- Simplified Bow Table
- Bowed Strings

Distortion Guitar
Commuted Synthesis
Digital Waveguide Mesh
Horn Filter Design
Finite Differences
Virtual Analog
Wave Digital Filters

Digital Waveguide Bowed Strings (1986)

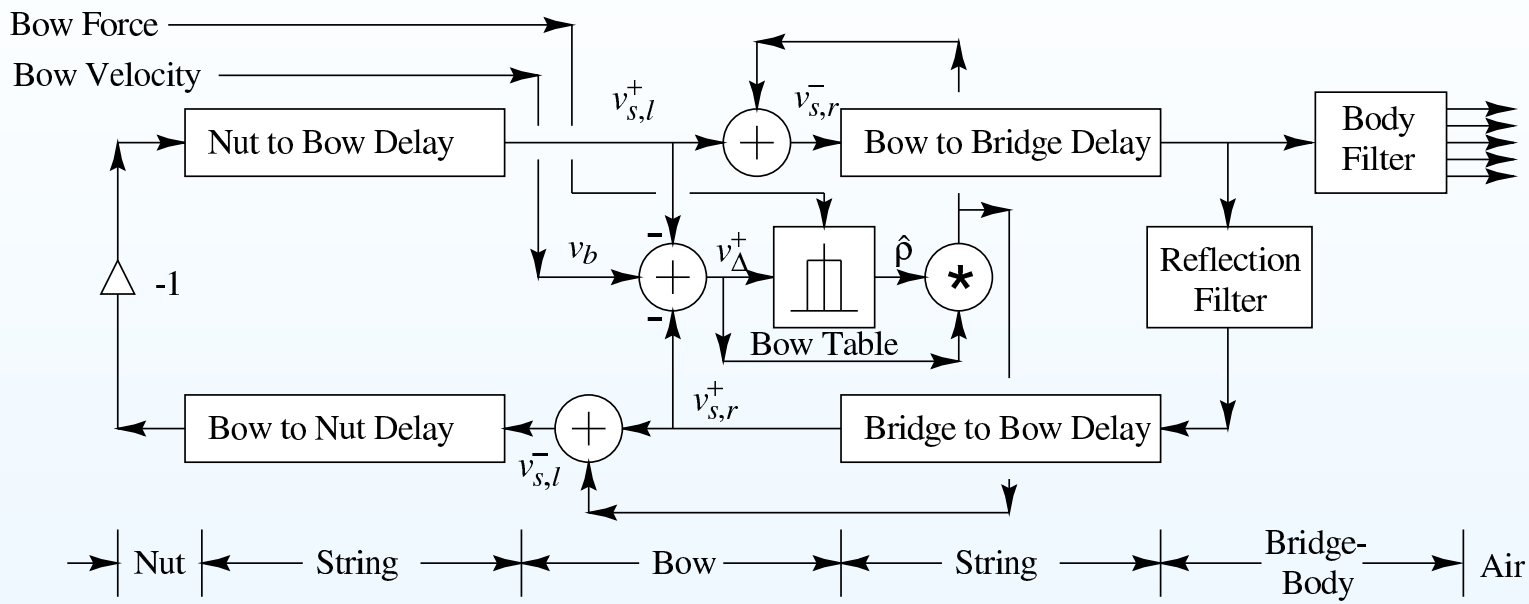

- Reflection filter summarizes all losses per period (due to bridge, bow, finger, etc.)
- Bow-string junction = *memoryless* lookup table (or segmented polynomial)

Overview

Early Voice Models

Digital Voice Models

Karplus Strong

Digital Waveguides

Single Reeds

Bowed Strings

- Schematic Model
- Bow-String Contact
- Bow-String Junction
- Bow-String Reflection
- Simplified Bow Table
- Bowed Strings

Distortion Guitar

Commuted Synthesis

Digital Waveguide Mesh

Horn Filter Design

Finite Differences

Virtual Analog

Wave Digital Filters

Bowed and Plucked Sound Examples by Esteban Maestre

- Synthetically Bowing STK's `Bowed.cpp`
- Finite-Width Thermal Friction Model for Bowed String
- Waveguide Strings Coupled to Modal-Synthesis Bridge

Overview
Early Voice Models
Digital Voice Models
Karplus Strong
Digital Waveguides
Single Reeds
Bowed Strings
Distortion Guitar
Commuted Synthesis
Digital Waveguide Mesh
Horn Filter Design
Finite Differences
Virtual Analog
Wave Digital Filters

Electric Guitar with Overdrive and Feedback

Overview
Early Voice Models
Digital Voice Models
Karplus Strong
Digital Waveguides
Single Reeds
Bowed Strings
Distortion Guitar
Commuted Synthesis
Digital Waveguide Mesh
Horn Filter Design
Finite Differences
Virtual Analog
Wave Digital Filters

Amplifier Distortion + Amplifier Feedback

Sullivan 1990

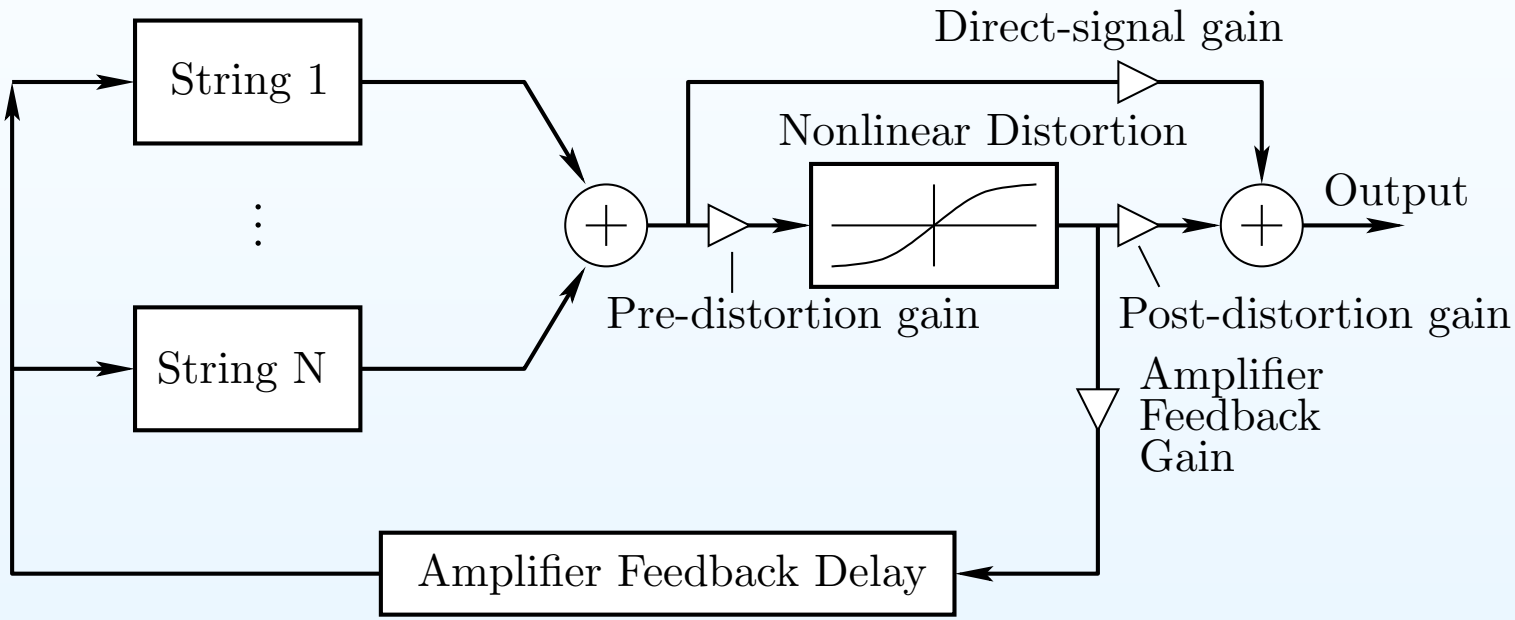

Distortion output signal often further filtered by an *amplifier cabinet filter*, representing speaker cabinet, driver responses, etc.

Overview
Early Voice Models
Digital Voice Models
Karplus Strong
Digital Waveguides
Single Reeds
Bowed Strings
Distortion Guitar
Commuted Synthesis
Digital Waveguide Mesh
Horn Filter Design
Finite Differences
Virtual Analog
Wave Digital Filters

Distortion Guitar Sound Examples

(Stanford Sondius Project, ca. 1995)

- Distortion Guitar: (WAV) (MP3)
- Amplifier Feedback 1: (WAV) (MP3)
- Amplifier Feedback 2: (WAV) (MP3)

Overview
Early Voice Models
Digital Voice Models
Karplus Strong
Digital Waveguides
Single Reeds
Bowed Strings
Distortion Guitar
Commuted Synthesis
Digital Waveguide Mesh
Horn Filter Design
Finite Differences
Virtual Analog
Wave Digital Filters

Commuted Waveguide Synthesis

Overview
Early Voice Models
Digital Voice Models
Karplus Strong
Digital Waveguides
Single Reeds
Bowed Strings
Distortion Guitar
Commuted Synthesis
- Acoustic Strings
- Sound Examples
- Linearized Violin
- Commuted Piano
- Pulse Synthesis
- Complete Piano
- Sound Examples

Digital Waveguide Mesh
Horn Filter Design
Finite Differences
Virtual Analog
Wave Digital Filters

Commuted Synthesis of Acoustic Strings (1993)

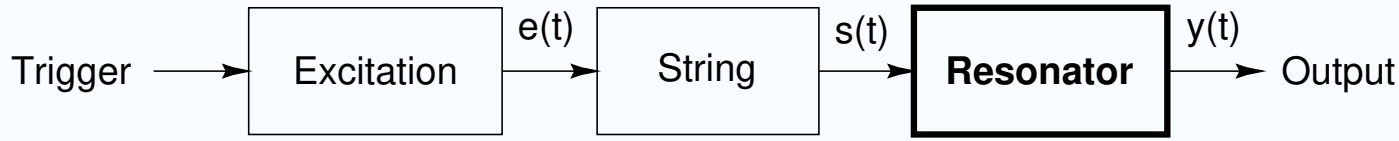

Schematic diagram of a stringed musical instrument.

Equivalent diagram in the linear, time-invariant case.

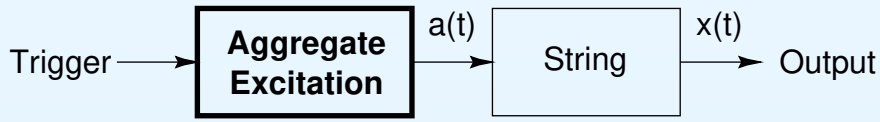

Use of an aggregate excitation given by the convolution of original excitation with the resonator impulse response.

Overview
Early Voice Models
Digital Voice Models
Karplus Strong
Digital Waveguides
Single Reeds
Bowed Strings
Distortion Guitar
Commuted Synthesis
- Acoustic Strings
- Sound Examples
- Linearized Violin
- Commuted Piano
- Pulse Synthesis
- Complete Piano
- Sound Examples

Digital Waveguide Mesh
Horn Filter Design
Finite Differences
Virtual Analog
Wave Digital Filters

Commuted Components

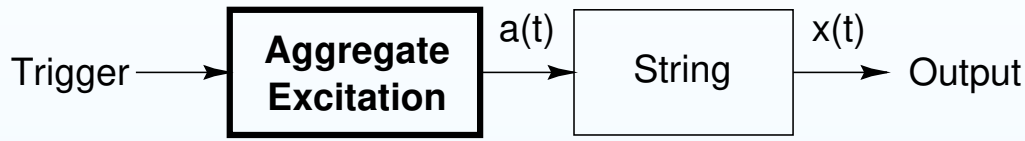

"Plucked Resonator" driving a String.

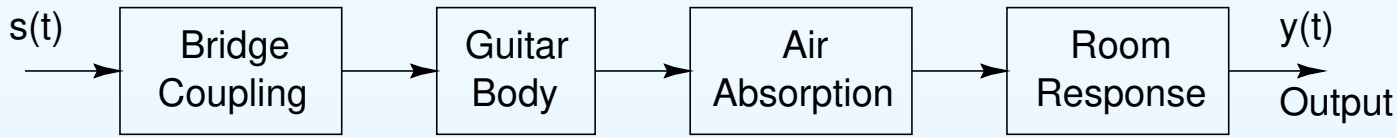

Possible components of a guitar resonator.

Overview
Early Voice Models
Digital Voice Models
Karplus Strong
Digital Waveguides
Single Reeds
Bowed Strings
Distortion Guitar
Commuted Synthesis
- Acoustic Strings
- Sound Examples
- Linearized Violin
- Commuted Piano
- Pulse Synthesis
- Complete Piano
- Sound Examples

Digital Waveguide Mesh
Horn Filter Design
Finite Differences
Virtual Analog
Wave Digital Filters

Sound Examples

Electric Guitar (Pick-Ups and/or Body-Model Added) (Stanford Sondius Project → Staccato Systems, Inc. → ADI, ca. 1995)

- Example 1: (WAV) (MP3)
- Example 2: (WAV) (MP3)
- Example 3: (WAV) (MP3)
- Virtual "wah-wah pedal": (WAV) (MP3)

STK Mandolin

- STK Mandolin 1: (WAV) (MP3)
- STK Mandolin 2: (WAV) (MP3)

Overview
Early Voice Models
Digital Voice Models
Karplus Strong
Digital Waveguides
Single Reeds
Bowed Strings
Distortion Guitar
Commuted Synthesis
- Acoustic Strings
- Sound Examples
- Linearized Violin
- Commuted Piano
- Pulse Synthesis
- Complete Piano
- Sound Examples

Digital Waveguide Mesh
Horn Filter Design
Finite Differences
Virtual Analog
Wave Digital Filters

Sound Examples

More Recent Acoustic Guitar

- Bach Prelude in E Major: (WAV) (MP3)
- Bach Loure in E Major: (WAV) (MP3)
- More examples
- Yet more examples

Virtual performance by Dr. Mikael Laurson, Sibelius Institute

Virtual guitar by Helsinki Univ. of Tech., Acoustics Lab[1]

[1] http://www.acoustics.hut.fi/

Overview
Early Voice Models
Digital Voice Models
Karplus Strong
Digital Waveguides
Single Reeds
Bowed Strings
Distortion Guitar
Commuted Synthesis
- Acoustic Strings
- Sound Examples
- Linearized Violin
- Commuted Piano
- Pulse Synthesis
- Complete Piano
- Sound Examples

Digital Waveguide Mesh
Horn Filter Design
Finite Differences
Virtual Analog
Wave Digital Filters

Commuted Synthesis of Linearized Violin

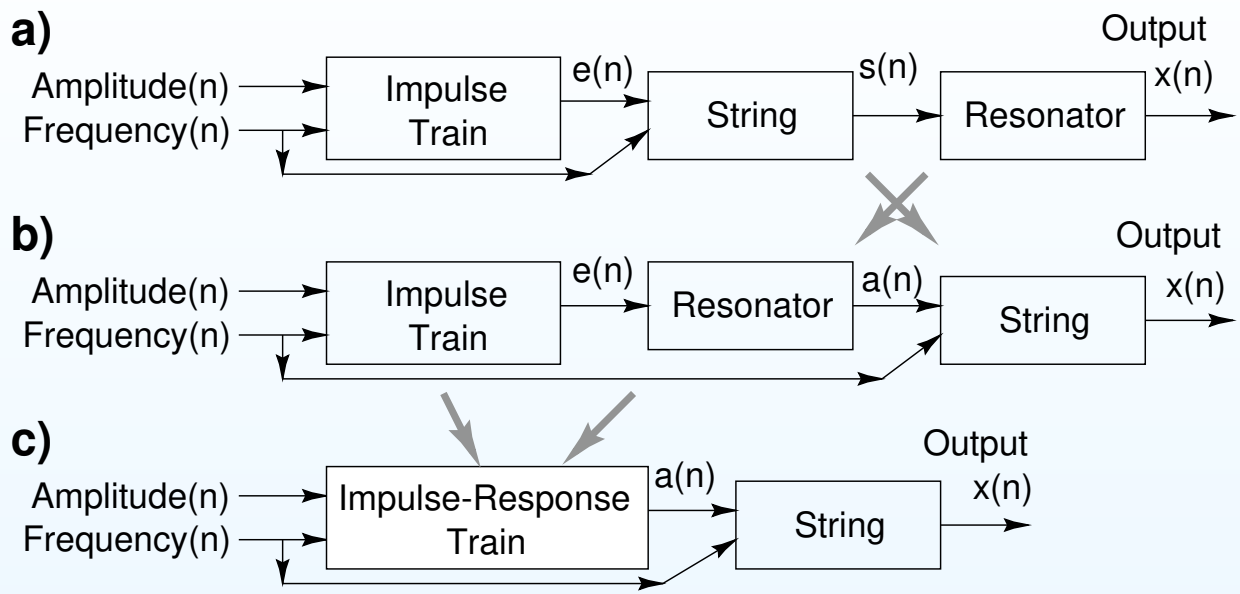

- Assumes *ideal Helmholtz motion* of string
- Sound Examples (Stanford Sondius project, ca. 1995):
  - Bass: (WAV) (MP3)
  - Cello: (WAV) (MP3)
  - Viola 1: (WAV) (MP3)
  - Viola 2: (WAV) (MP3)
  - Violin 1: (WAV) (MP3)
  - Violin 2: (WAV) (MP3)
  - Duet: (WAV) (MP3)

Overview
Early Voice Models
Digital Voice Models
Karplus Strong
Digital Waveguides
Single Reeds
Bowed Strings
Distortion Guitar
Commuted Synthesis
- Acoustic Strings
- Sound Examples
- Linearized Violin
- Commuted Piano
- Pulse Synthesis
- Complete Piano
- Sound Examples

Digital Waveguide Mesh
Horn Filter Design
Finite Differences
Virtual Analog
Wave Digital Filters

Commuted Piano Synthesis (1995)

Hammer-string interaction pulses (force):

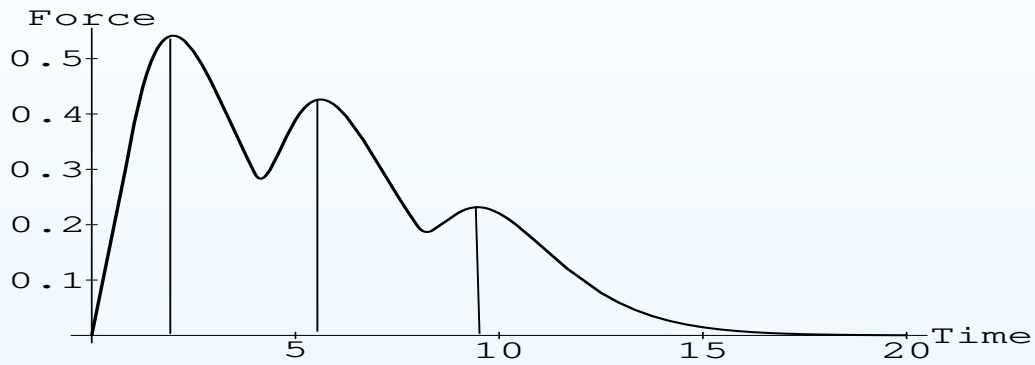

Overview
Early Voice Models
Digital Voice Models
Karplus Strong
Digital Waveguides
Single Reeds
Bowed Strings
Distortion Guitar
Commuted Synthesis
- Acoustic Strings
- Sound Examples
- Linearized Violin
- Commuted Piano
- Pulse Synthesis
- Complete Piano
- Sound Examples

Digital Waveguide Mesh
Horn Filter Design
Finite Differences
Virtual Analog
Wave Digital Filters

Synthesis of Hammer-String Interaction Pulse

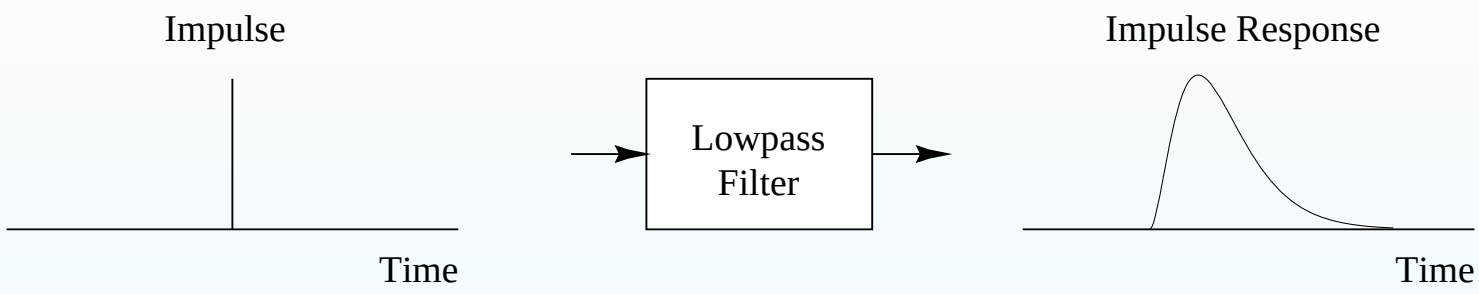

- Faster collisions correspond to *narrower* pulses (*nonlinear filter*)
- For a *given velocity*, filter is linear time-invariant
- Piano is “linearized” for each hammer velocity

Overview
Early Voice Models
Digital Voice Models
Karplus Strong
Digital Waveguides
Single Reeds
Bowed Strings
Distortion Guitar
Commuted Synthesis
- Acoustic Strings
- Sound Examples
- Linearized Violin
- Commuted Piano
- Pulse Synthesis
- Complete Piano
- Sound Examples

Digital Waveguide Mesh
Horn Filter Design
Finite Differences
Virtual Analog
Wave Digital Filters

Multiple Hammer-String Interaction Pulses

Superimpose several individual pulses:

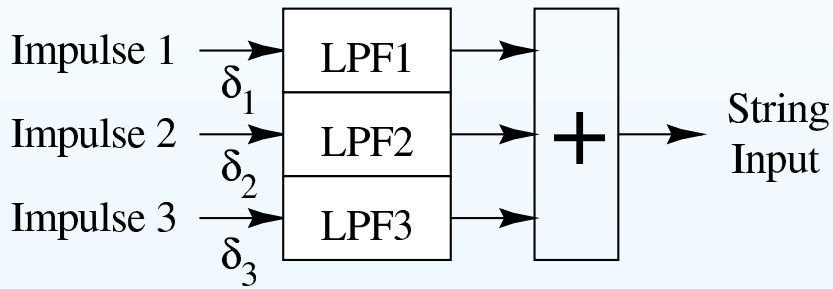

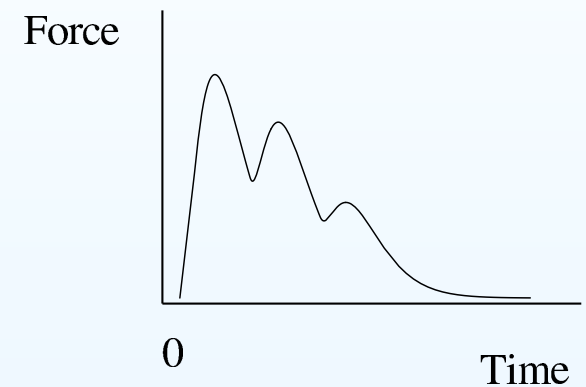

As impulse amplitude grows (faster hammer strike), output pulses become *taller and thinner*, showing less overlap.

Overview
Early Voice Models
Digital Voice Models
Karplus Strong
Digital Waveguides
Single Reeds
Bowed Strings
Distortion Guitar
Commuted Synthesis
- Acoustic Strings
- Sound Examples
- Linearized Violin
- Commuted Piano
- Pulse Synthesis
- Complete Piano
- Sound Examples

Digital Waveguide Mesh
Horn Filter Design
Finite Differences
Virtual Analog
Wave Digital Filters

Complete Piano Model

Natural Ordering:

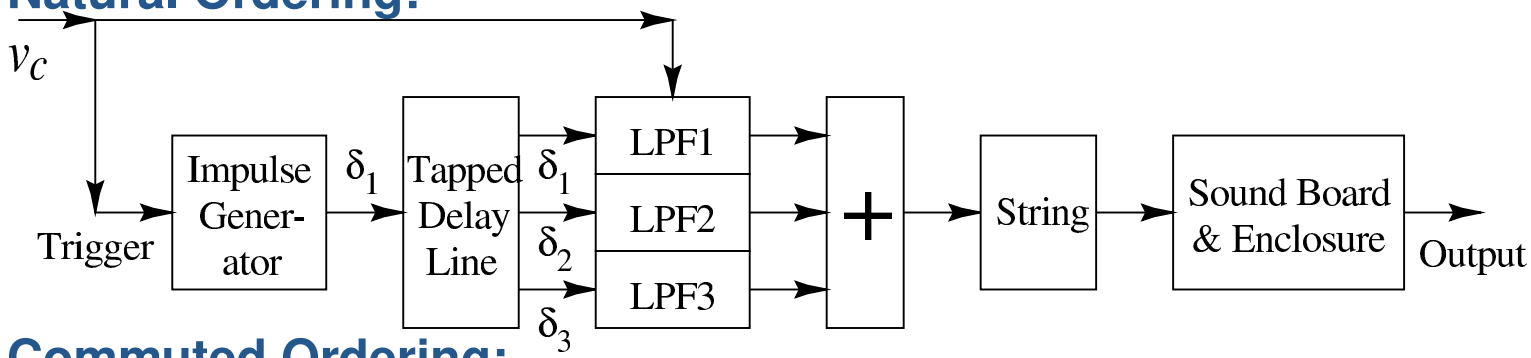

Commuted Ordering:

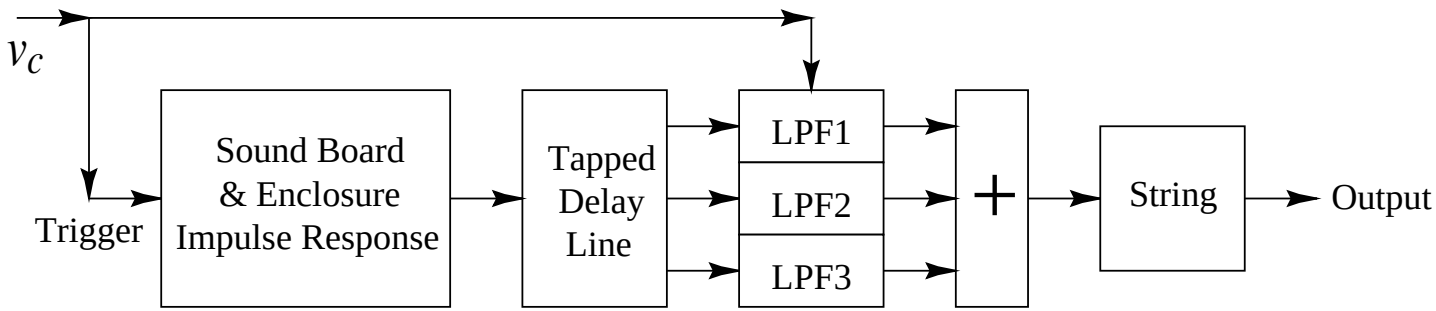

- Soundboard and enclosure are *commuted*
- Only need a stored recording of their *impulse response*
- An enormous digital filter is otherwise required

Overview
Early Voice Models
Digital Voice Models
Karplus Strong
Digital Waveguides
Single Reeds
Bowed Strings
Distortion Guitar
Commuted Synthesis
- Acoustic Strings
- Sound Examples
- Linearized Violin
- Commuted Piano
- Pulse Synthesis
- Complete Piano
- Sound Examples

Digital Waveguide Mesh
Horn Filter Design
Finite Differences
Virtual Analog
Wave Digital Filters

Piano and Harpsichord Sound Examples

(Stanford Sondius Project, ca. 1995)

- Piano: (WAV) (MP3)
- Harpsichord 1: (WAV) (MP3)
- Harpsichord 2: (WAV) (MP3)

Overview
Early Voice Models
Digital Voice Models
Karplus Strong
Digital Waveguides
Single Reeds
Bowed Strings
Distortion Guitar
Commuted Synthesis
- Acoustic Strings
- Sound Examples
- Linearized Violin
- Commuted Piano
- Pulse Synthesis
- Complete Piano
- Sound Examples

Digital Waveguide Mesh
Horn Filter Design
Finite Differences
Virtual Analog
Wave Digital Filters

More Recent Harpsichord Example

- Harpsichord Soundboard Hammer-Response: (WAV) (MP3)
- Musical Commuted Harpsichord Example: (WAV) (MP3)
- More examples

References:

- "Sound Synthesis of the Harpsichord Using a Computationally Efficient Physical Model",
- by Vesa Välimäki, Henri Penttinen, Jonte Knif, Mikael Laurson, and Cumhur Erkut, JASP-2004
- Recent dissertation by *Jack Perng* (Stanford, Physics/CCRMA)

Overview
Early Voice Models
Digital Voice Models
Karplus Strong
Digital Waveguides
Single Reeds
Bowed Strings
Distortion Guitar
Commuted Synthesis
Digital Waveguide Mesh
Horn Filter Design
Finite Differences
Virtual Analog
Wave Digital Filters

Digital Waveguide Mesh

2D Waveguide Mesh

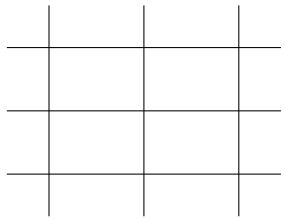

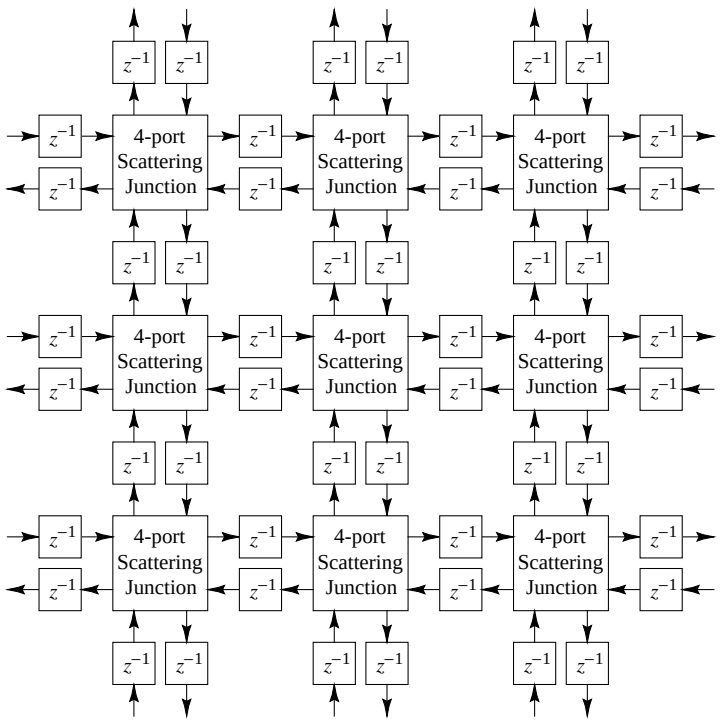

At each junction:

$$
\begin{aligned}
V_J &= \frac{\text{in}_1 + \text{in}_2 + \text{in}_3 + \text{in}_4}{2} \\
\text{out}_k &= V_J - \text{in}_k, \qquad k = 1, 2, 3, 4
\end{aligned}
$$

Sound example:

- Gongs (lossless nonlinear rim by Pierce and Van Duyne JASA-1997)

Overview
Early Voice Models
Digital Voice Models
Karplus Strong
Digital Waveguides
Single Reeds
Bowed Strings
Distortion Guitar
Commuted Synthesis
Digital Waveguide Mesh
- 2D Waveguide Mesh
- QR Diffuser
- Example QRD
- QRD Mesh Boundary
- Scattering Levels

Horn Filter Design
Finite Differences
Virtual Analog
Wave Digital Filters

Recent Mesh Topic: Virtual Quadratic Residue Diffusers

Manfred Schroeder's Quadratic Residue Diffuser for $N = 17$:

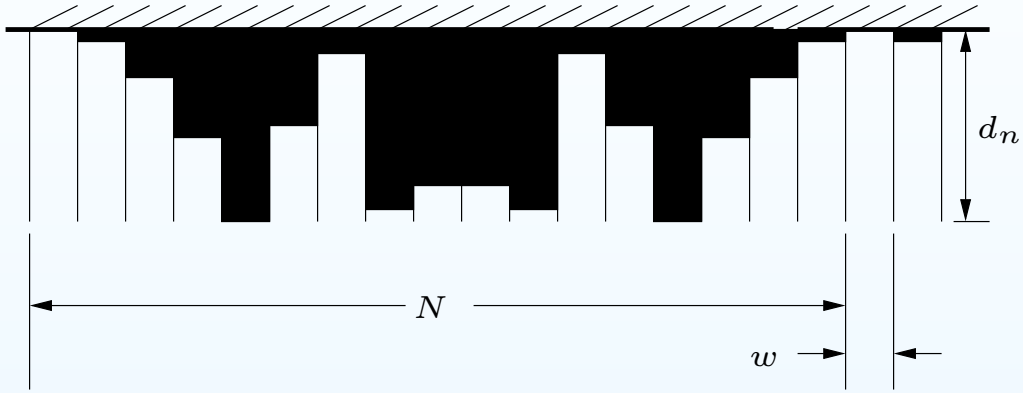

- Thin vertical lines = rigid separators between wells.
- Well depths are $N - s_n$, where

$$s_n = n^2 \pmod{N}, \quad n \in \mathbb{Z}$$

is a *quadratic residue sequence*

Overview
Early Voice Models
Digital Voice Models
Karplus Strong
Digital Waveguides
Single Reeds
Bowed Strings
Distortion Guitar
Commuted Synthesis
Digital Waveguide Mesh
- 2D Waveguide Mesh
- QR Diffuser
- Example QRD
- QRD Mesh Boundary
- Scattering Levels

Horn Filter Design
Finite Differences
Virtual Analog
Wave Digital Filters

Example QRD

For $N = 17$, we have

$$s = [0, 1, 4, 9, 16, 8, 2, 15, 13, 13, 15, 2, 8, 16, 9, 4, 1; 0, 1, \ldots]$$

Reflection magnitude *equal* in N equally spaced directions at the "design wavelength" (and "not bad" in between)

Overview
Early Voice Models
Digital Voice Models
Karplus Strong
Digital Waveguides
Single Reeds
Bowed Strings
Distortion Guitar
Commuted Synthesis
Digital Waveguide Mesh
- 2D Waveguide Mesh
- QR Diffuser
- Example QRD
- QRD Mesh Boundary
- Scattering Levels

Horn Filter Design
Finite Differences
Virtual Analog
Wave Digital Filters

QRD Termination of a 2D Digital Waveguide Mesh

(Lee-Smith ICMC-2004)

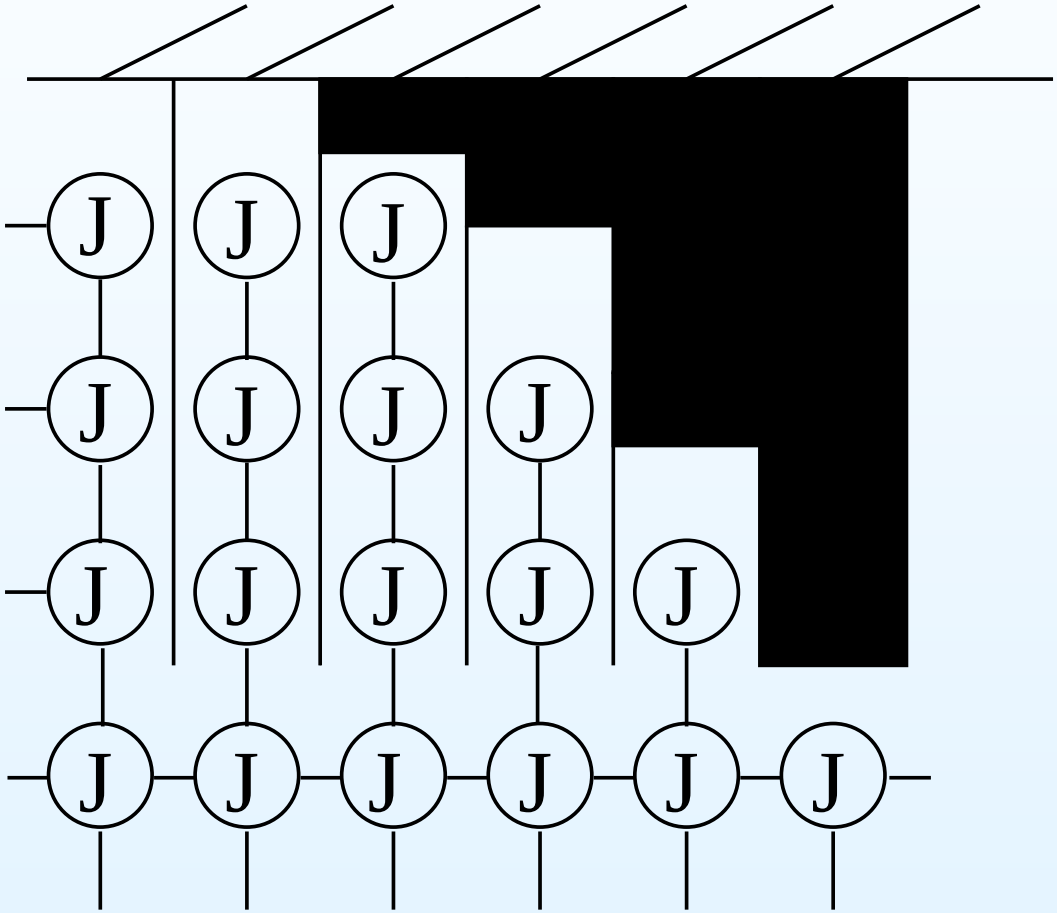

Overview
Early Voice Models
Digital Voice Models
Karplus Strong
Digital Waveguides
Single Reeds
Bowed Strings
Distortion Guitar
Commuted Synthesis
Digital Waveguide Mesh
- 2D Waveguide Mesh
- QR Diffuser
- Example QRD
- QRD Mesh Boundary
- Scattering Levels

Horn Filter Design
Finite Differences
Virtual Analog
Wave Digital Filters

Scattering levels from a Schroeder diffuser (solid) and a straight boundary (dashed)

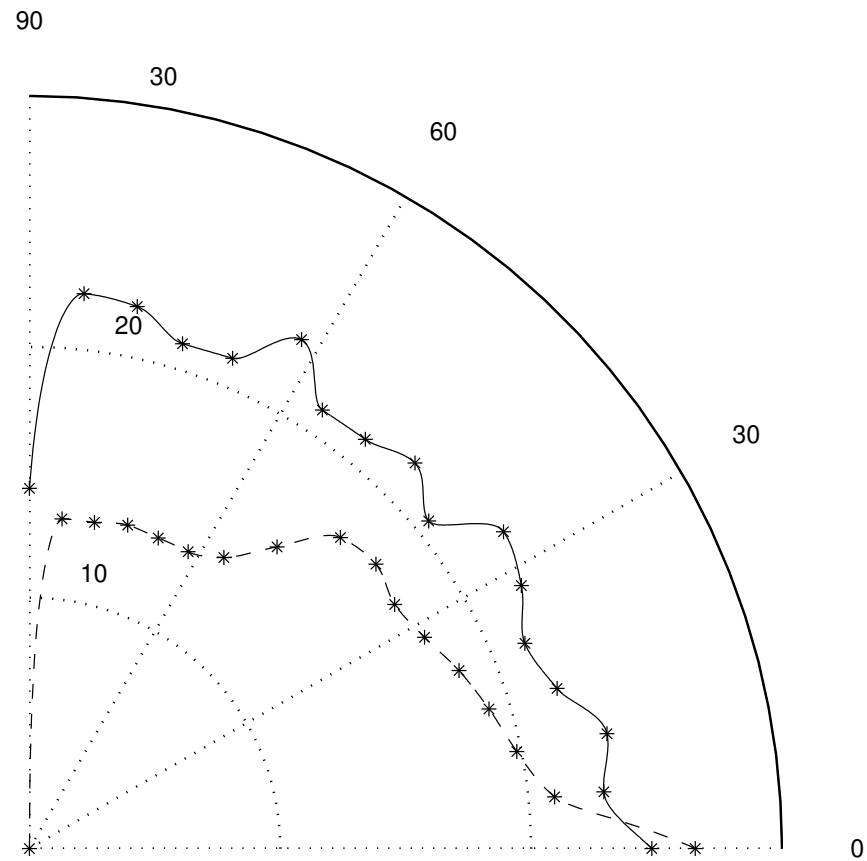

Animations: https://ccrma.stanford.edu/~kglee/2dmesh_QRD/

Overview
Early Voice Models
Digital Voice Models
Karplus Strong
Digital Waveguides
Single Reeds
Bowed Strings
Distortion Guitar
Commuted Synthesis
Digital Waveguide Mesh
Horn Filter Design
Finite Differences
Virtual Analog
Wave Digital Filters

Horn Filter Design

Overview
Early Voice Models
Digital Voice Models
Karplus Strong
Digital Waveguides
Single Reeds
Bowed Strings
Distortion Guitar
Commuted Synthesis
Digital Waveguide Mesh
Horn Filter Design
- Bore Profile
- Impulse Response
- Bell Filter Design
- Bell Reflectance
- Idea! (1998)
- Four Exponentials
- Exponentials & Cubic
- Exponentials & SM
- Example
- One-Pole TIIR

Finite Differences
Virtual Analog

Bore Profile Reconstruction from Measured Trumpet Reflectance

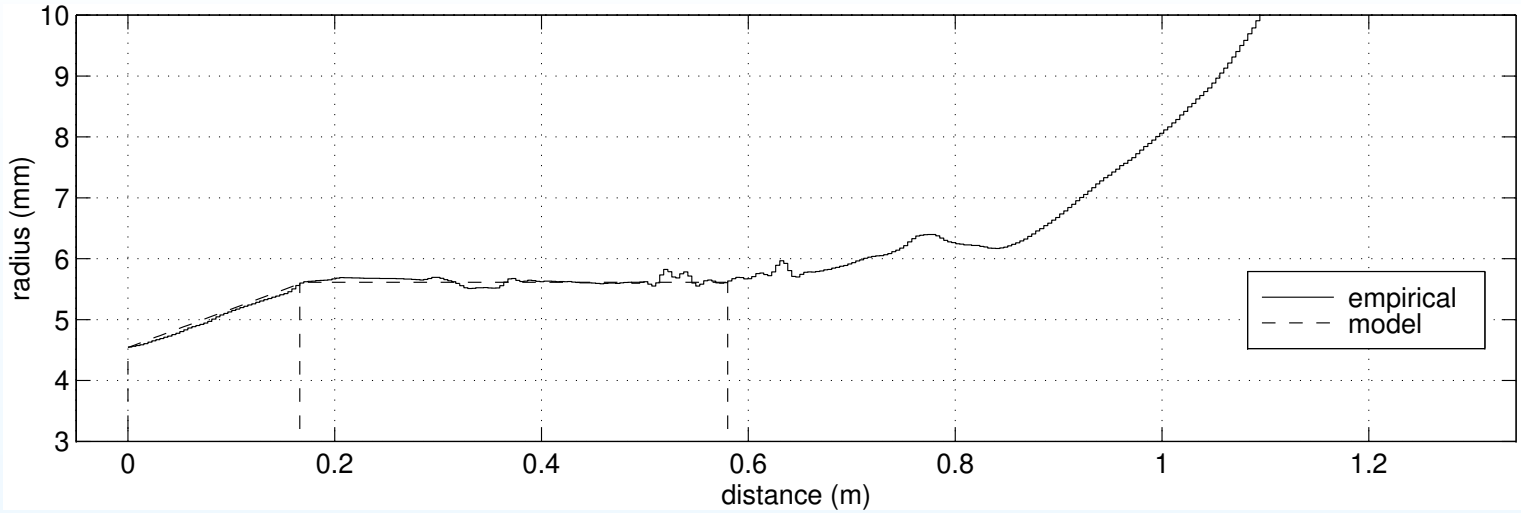

- Inverse scattering applied to pulse-reflectometry data to fit piecewise-cylindrical model (like LPC model)
- Bore profile reconstruction is reasonable up to bell
- The bell is not physically equivalent to a piecewise-cylindrical acoustic tube, due to
  - complex radiation impedance,
  - conversion to higher order transverse modes

Trumpet-Bell Impulse Response Computed from Estimated Piecewise-Cylindrical Model

Overview
Early Voice Models
Digital Voice Models
Karplus Strong
Digital Waveguides
Single Reeds
Bowed Strings
Distortion Guitar
Commuted Synthesis
Digital Waveguide Mesh
Horn Filter Design
- Bore Profile
- Impulse Response
- Bell Filter Design
- Bell Reflectance
- Idea! (1998)
- Four Exponentials
- Exponentials & Cubic
- Exponentials & SM
- Example
- One-Pole TIIR

Finite Differences
Virtual Analog

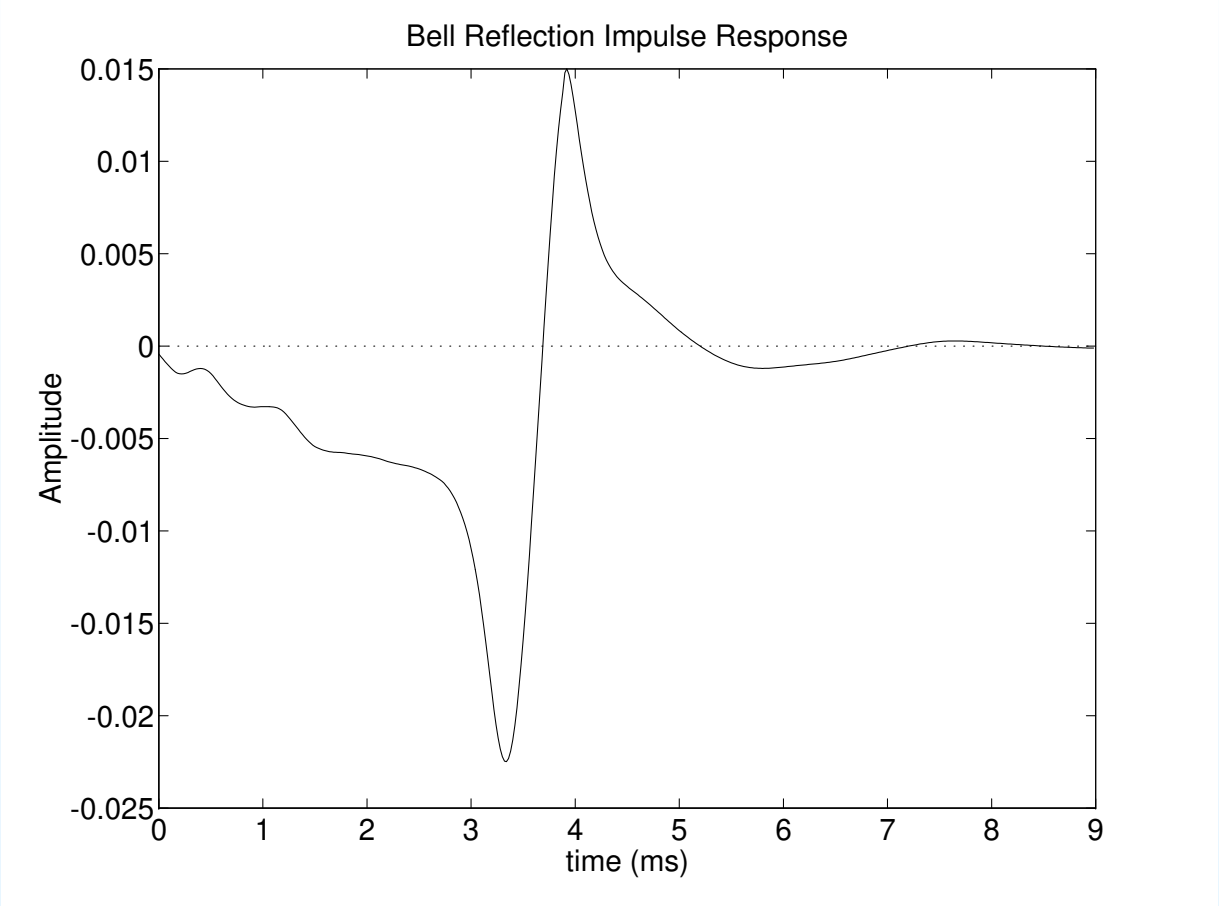

- From pulse reflectometry on trumpet with no mouthpiece
- Bore profile is reconstructed, smoothed, and segmented
- Impulse response of “bell segment” = “ideal filter”

Overview
Early Voice Models
Digital Voice Models
Karplus Strong
Digital Waveguides
Single Reeds
Bowed Strings
Distortion Guitar
Commuted Synthesis
Digital Waveguide Mesh
Horn Filter Design
- Bore Profile
- Impulse Response
- Bell Filter Design
- Bell Reflectance
- Idea! (1998)
- Four Exponentials
- Exponentials & Cubic
- Exponentials & SM
- Example
- One-Pole TIIR

Finite Differences
Virtual Analog

Trumpet-Bell Filter Design Problem

- At $f_s = 44.1$ kHz, impulse-response length $\approx 400 - -600$ samples
- A length 400 FIR bell filter is expensive!
- Convert to IIR? Hard because
  - Phase (resonance tunings) must be preserved
  - Magnitude (resonance Q) must be preserved
  - Rise time $\approx$ 150 samples
  - Phase-sensitive IIR design methods perform poorly

Measured Trombone Bell Reflectance

Overview
Early Voice Models
Digital Voice Models
Karplus Strong
Digital Waveguides
Single Reeds
Bowed Strings
Distortion Guitar
Commuted Synthesis
Digital Waveguide Mesh
Horn Filter Design
- Bore Profile
- Impulse Response
- Bell Filter Design
- Bell Reflectance
- Idea! (1998)
- Four Exponentials
- Exponentials & Cubic
- Exponentials & SM
- Example
- One-Pole TIIR

Finite Differences
Virtual Analog

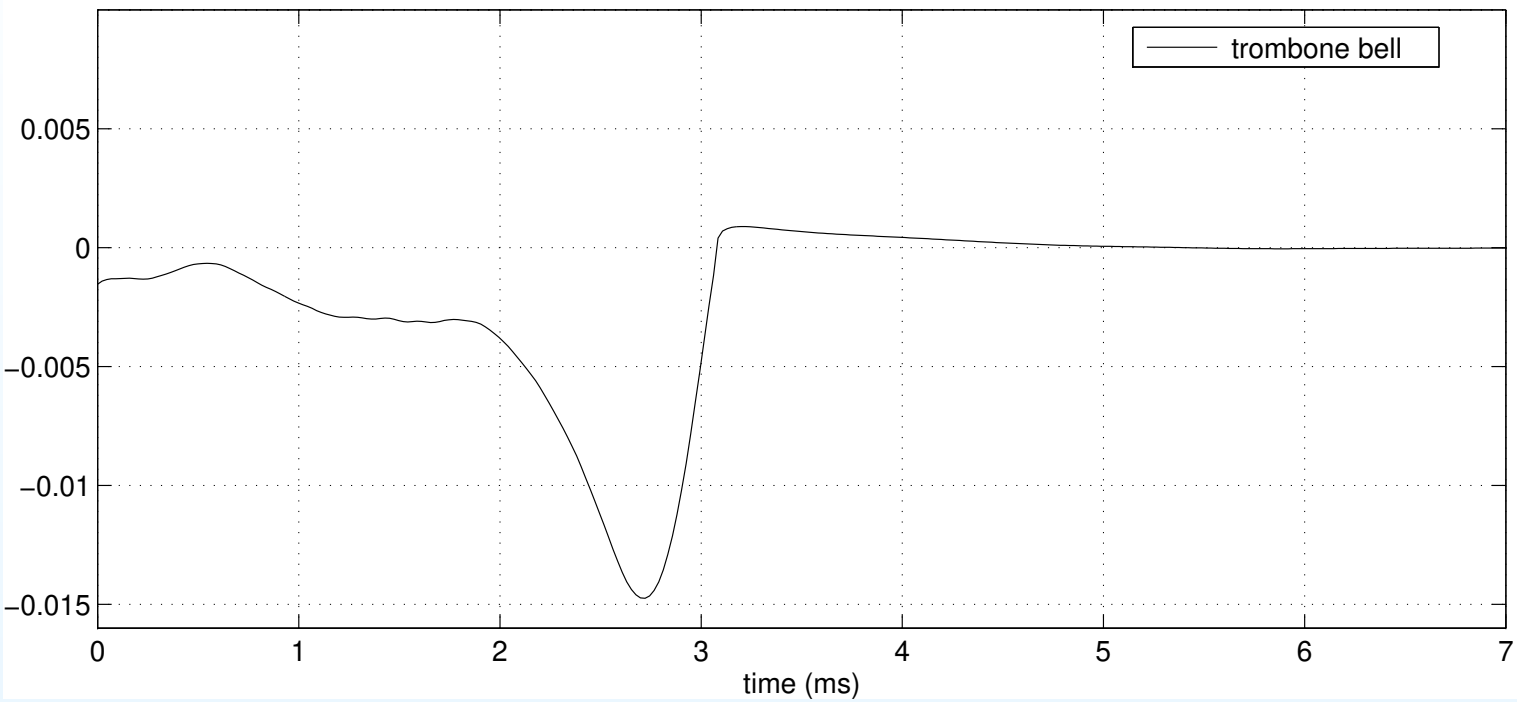

Overview
Early Voice Models
Digital Voice Models
Karplus Strong
Digital Waveguides
Single Reeds
Bowed Strings
Distortion Guitar
Commuted Synthesis
Digital Waveguide Mesh
Horn Filter Design
- Bore Profile
- Impulse Response
- Bell Filter Design
- Bell Reflectance
- Idea! (1998)
- Four Exponentials
- Exponentials & Cubic
- Exponentials & SM
- Example
- One-Pole TIIR

Finite Differences
Virtual Analog

Idea! (1998)

- Break up impulse response into *exponential* or *polynomial segments*
- Exponential and polynomial impulse-responses can be designed using *Truncated IIR (TIIR) Filters*
- `Google` search: *TIIR Horns*

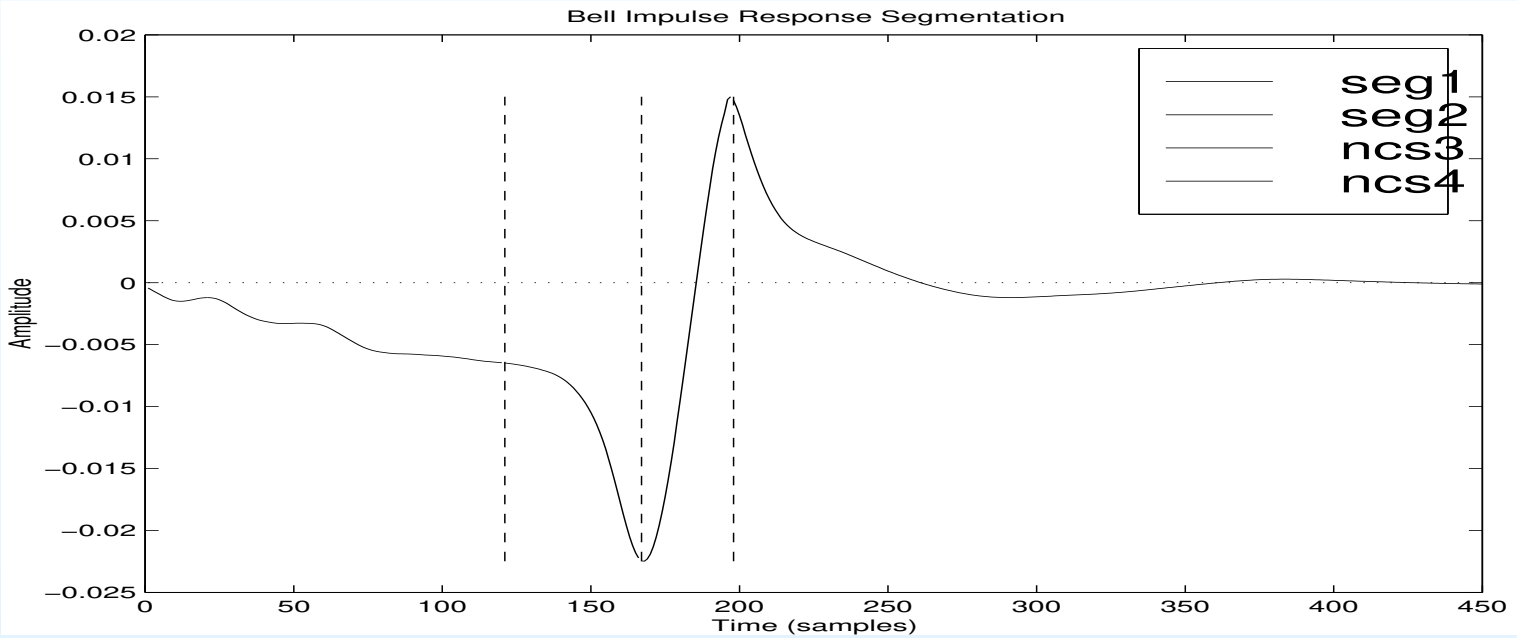

Four-Exponential Fit to Estimated Trumpet-Bell Filter (Exp-4)

Overview
Early Voice Models
Digital Voice Models
Karplus Strong
Digital Waveguides
Single Reeds
Bowed Strings
Distortion Guitar
Commuted Synthesis
Digital Waveguide Mesh
Horn Filter Design
- Bore Profile
- Impulse Response
- Bell Filter Design
- Bell Reflectance
- Idea! (1998)
- Four Exponentials
- Exponentials & Cubic
- Exponentials & SM
- Example
- One-Pole TIIR

Finite Differences
Virtual Analog

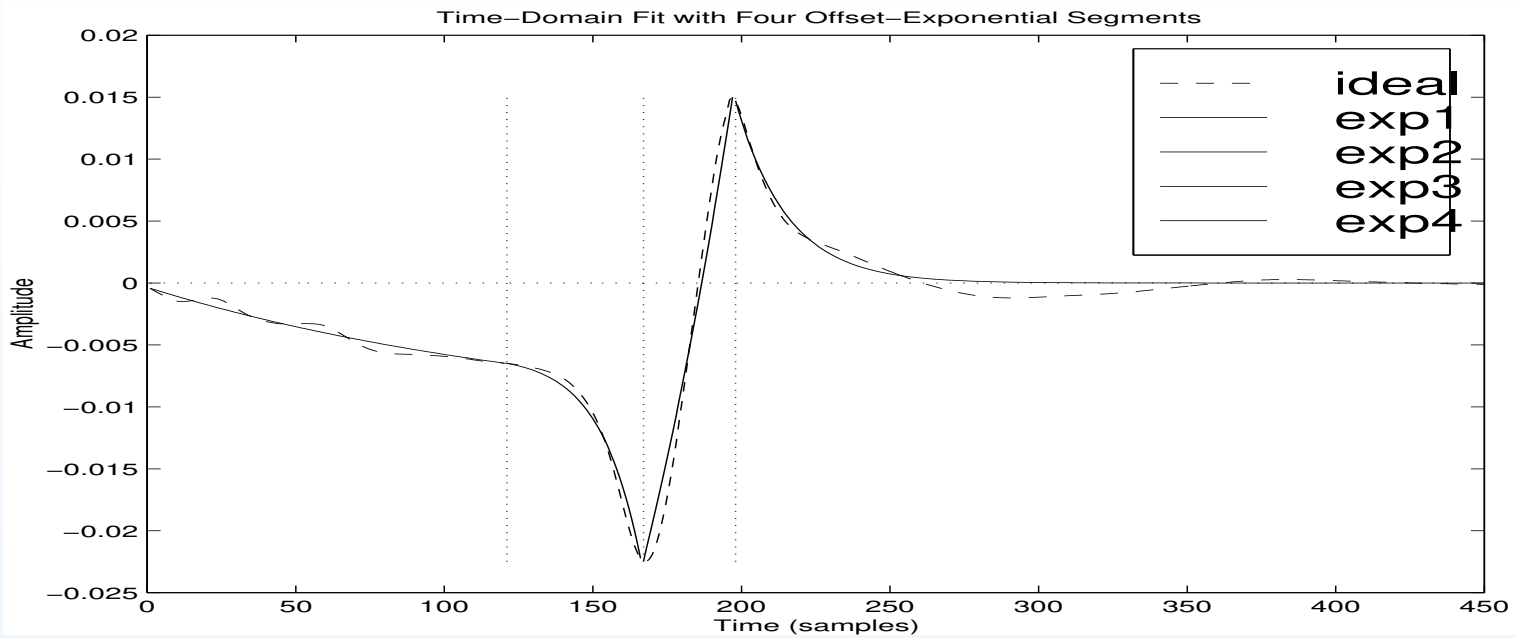

Exp-4 Impulse Response Fit

Two Exponentials Connected by a Cubic Spline Measured Trumpet Data (Exp2-S3)

Overview
Early Voice Models
Digital Voice Models
Karplus Strong
Digital Waveguides
Single Reeds
Bowed Strings
Distortion Guitar
Commuted Synthesis
Digital Waveguide Mesh
Horn Filter Design
- Bore Profile
- Impulse Response
- Bell Filter Design
- Bell Reflectance
- Idea! (1998)
- Four Exponentials
- Exponentials & Cubic
- Exponentials & SM
- Example
- One-Pole TIIR

Finite Differences
Virtual Analog

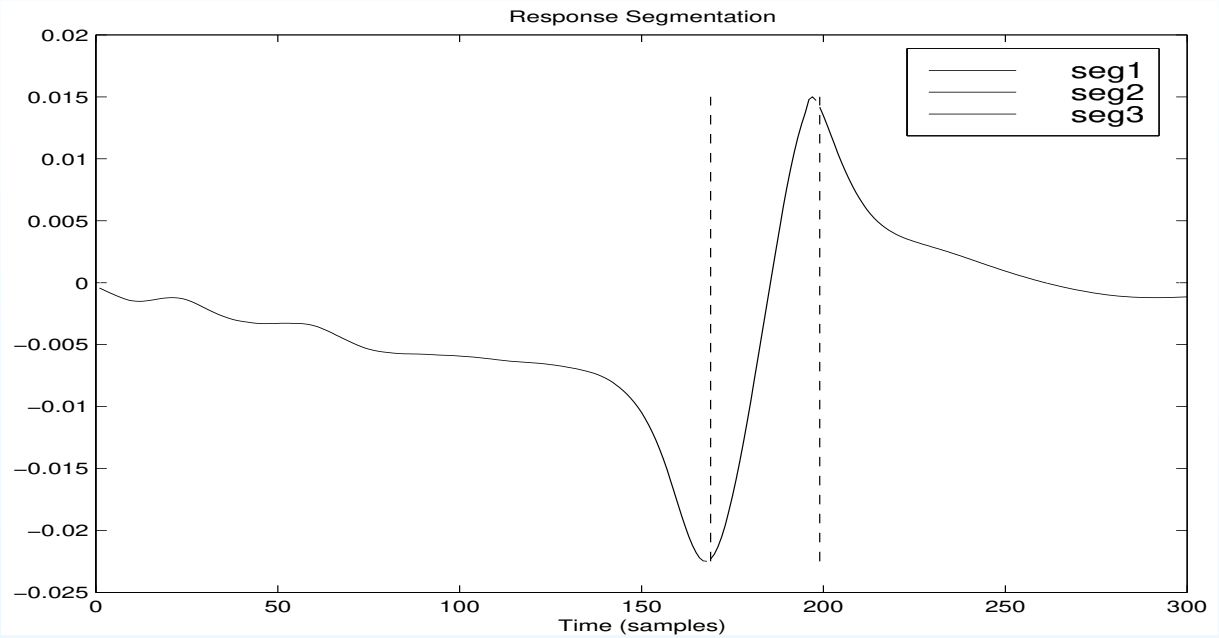

Two Exponentials Followed by a 6th-Order IIR Filter Designed by Steiglitz McBride Algorithm (Exp2-SM6)

Overview
Early Voice Models
Digital Voice Models
Karplus Strong
Digital Waveguides
Single Reeds
Bowed Strings
Distortion Guitar
Commuted Synthesis
Digital Waveguide Mesh
Horn Filter Design
- Bore Profile
- Impulse Response
- Bell Filter Design
- Bell Reflectance
- Idea! (1998)
- Four Exponentials
- Exponentials & Cubic
- Exponentials & SM
- Example
- One-Pole TIIR

Finite Differences
Virtual Analog

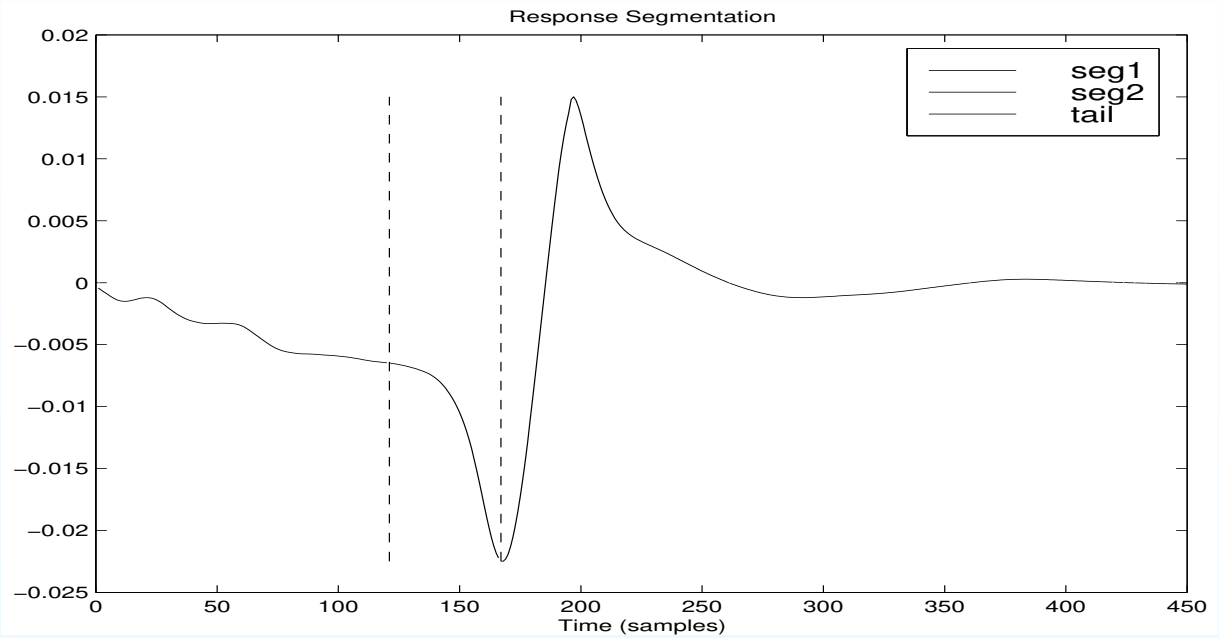

Exp2-SM6 Amplitude Response Fit

Overview
Early Voice Models
Digital Voice Models
Karplus Strong
Digital Waveguides
Single Reeds
Bowed Strings
Distortion Guitar
Commuted Synthesis
Digital Waveguide Mesh
Horn Filter Design
- Bore Profile
- Impulse Response
- Bell Filter Design
- Bell Reflectance
- Idea! (1998)
- Four Exponentials
- Exponentials & Cubic
- Exponentials & SM
- Example
- One-Pole TIIR

Finite Differences
Virtual Analog

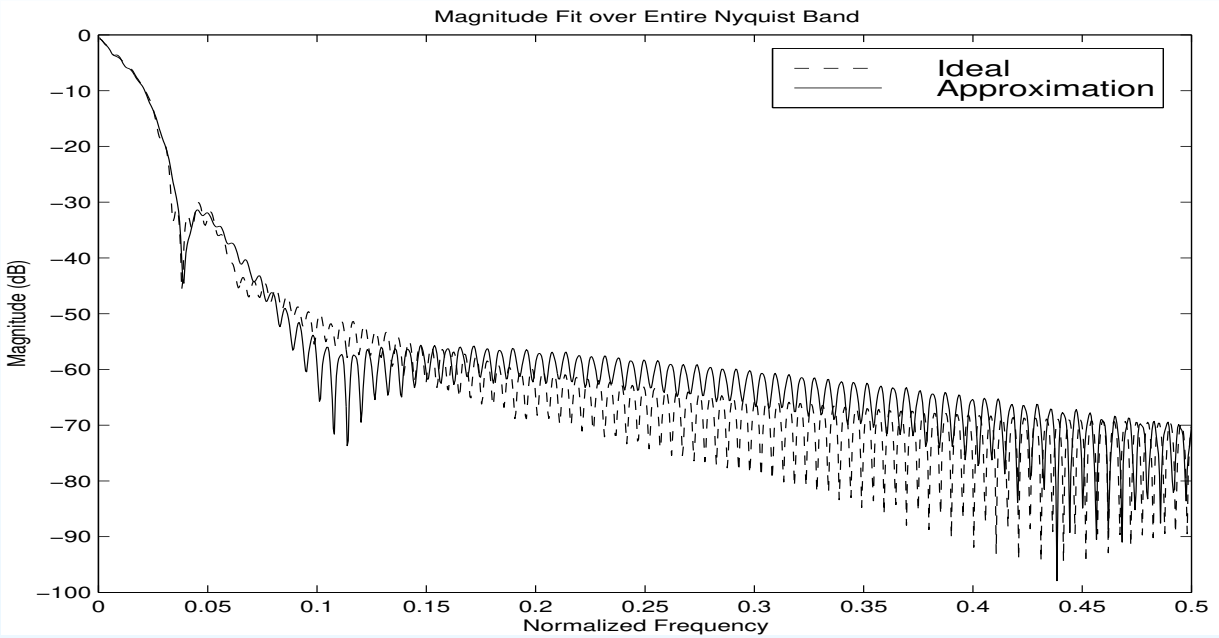

Exp2-SM6 Low-Frequency Zoom

Overview
Early Voice Models
Digital Voice Models
Karplus Strong
Digital Waveguides
Single Reeds
Bowed Strings
Distortion Guitar
Commuted Synthesis
Digital Waveguide Mesh
Horn Filter Design
- Bore Profile
- Impulse Response
- Bell Filter Design
- Bell Reflectance
- Idea! (1998)
- Four Exponentials
- Exponentials & Cubic
- Exponentials & SM
- Example
- One-Pole TIIR

Finite Differences
Virtual Analog

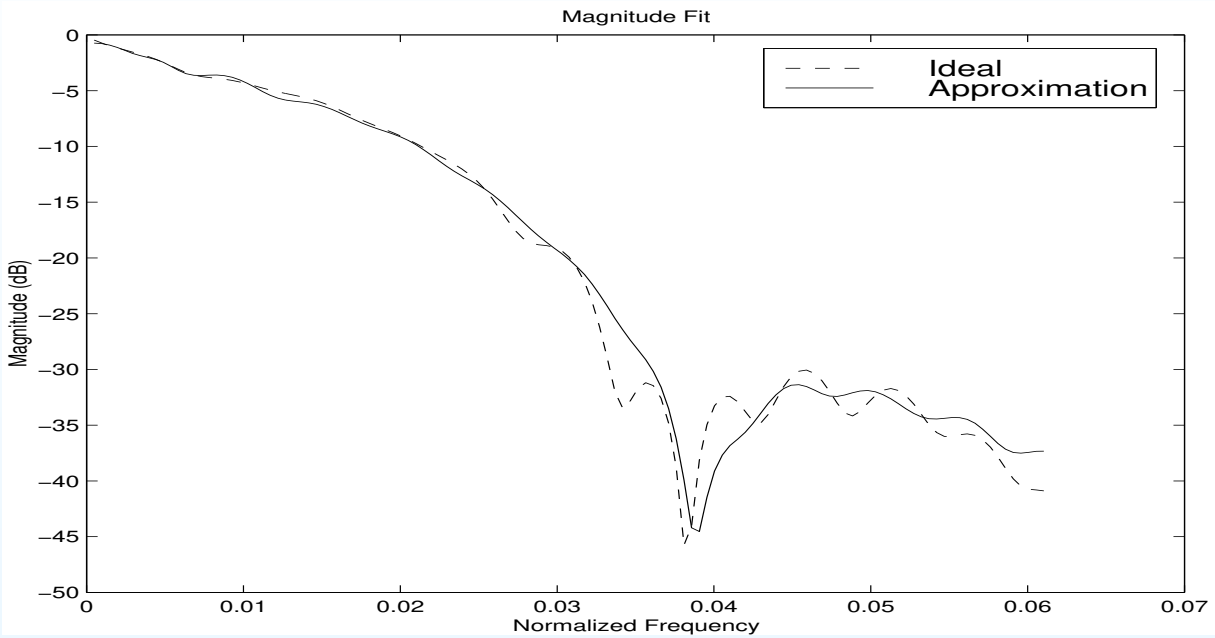

Exp2-SM6 Group Delay Fit

Overview
Early Voice Models
Digital Voice Models
Karplus Strong
Digital Waveguides
Single Reeds
Bowed Strings
Distortion Guitar
Commuted Synthesis
Digital Waveguide Mesh
Horn Filter Design
- Bore Profile
- Impulse Response
- Bell Filter Design
- Bell Reflectance
- Idea! (1998)
- Four Exponentials
- Exponentials & Cubic
- Exponentials & SM
- Example
- One-Pole TIIR

Finite Differences
Virtual Analog

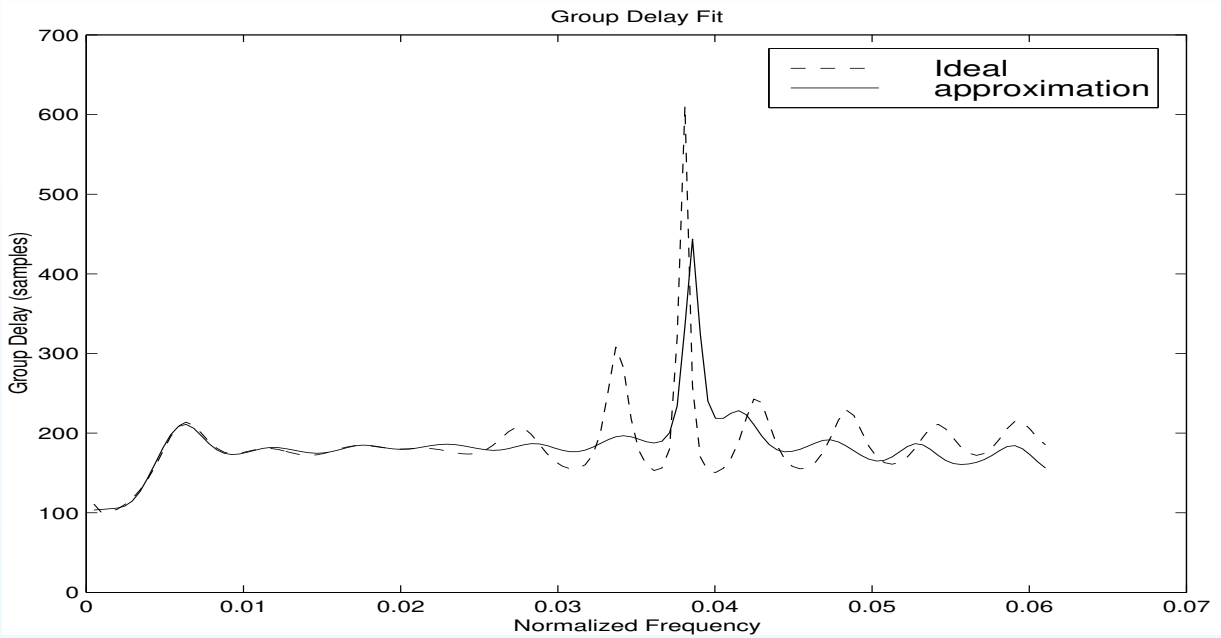

Exp2-SM6 Phase Delay Fit

Overview
Early Voice Models
Digital Voice Models
Karplus Strong
Digital Waveguides
Single Reeds
Bowed Strings
Distortion Guitar
Commuted Synthesis
Digital Waveguide Mesh
Horn Filter Design
- Bore Profile
- Impulse Response
- Bell Filter Design
- Bell Reflectance
- Idea! (1998)
- Four Exponentials
- Exponentials & Cubic
- Exponentials & SM
- Example
- One-Pole TIIR

Finite Differences
Virtual Analog

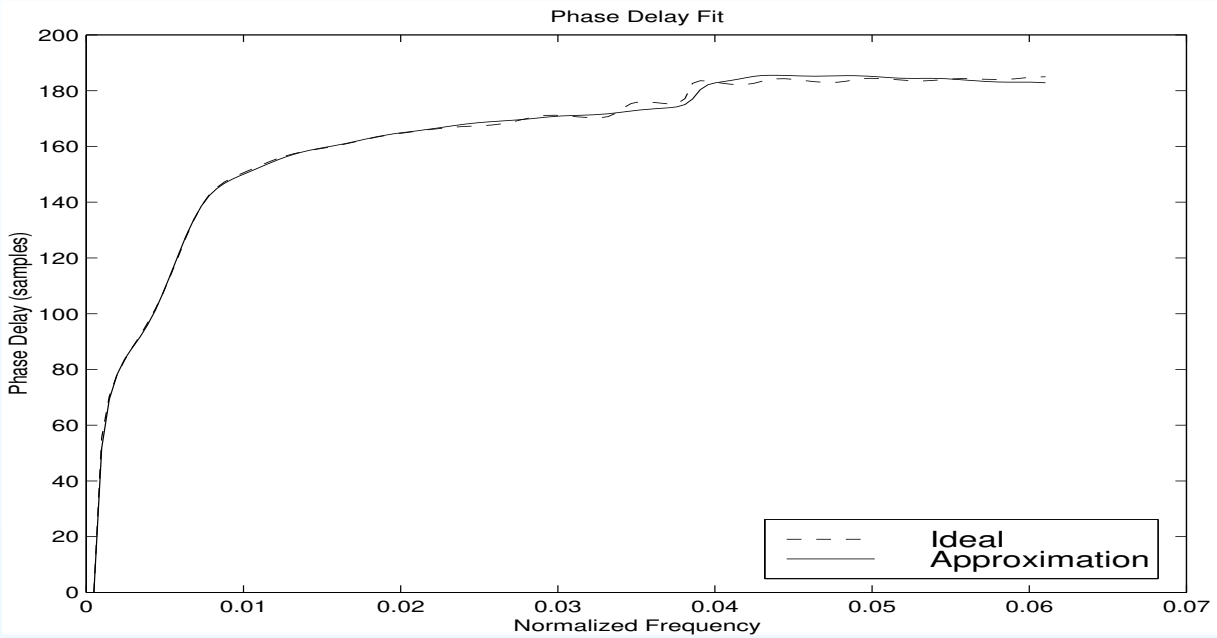

Overview
Early Voice Models
Digital Voice Models
Karplus Strong
Digital Waveguides
Single Reeds
Bowed Strings
Distortion Guitar
Commuted Synthesis
Digital Waveguide Mesh
Horn Filter Design
- Bore Profile
- Impulse Response
- Bell Filter Design
- Bell Reflectance
- Idea! (1998)
- Four Exponentials
- Exponentials & Cubic
- Exponentials & SM
- Example
- One-Pole TIIR

Finite Differences
Virtual Analog

A One-Pole (Almost) TIIR Filter

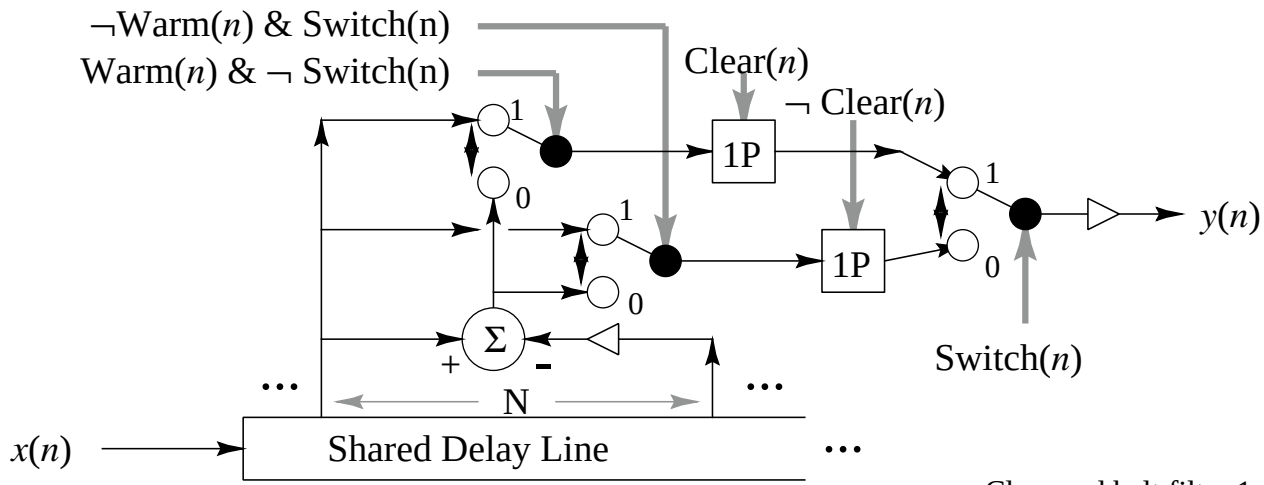

$$\boxed{1P} = \frac{1}{1 - pz^{-1}}$$

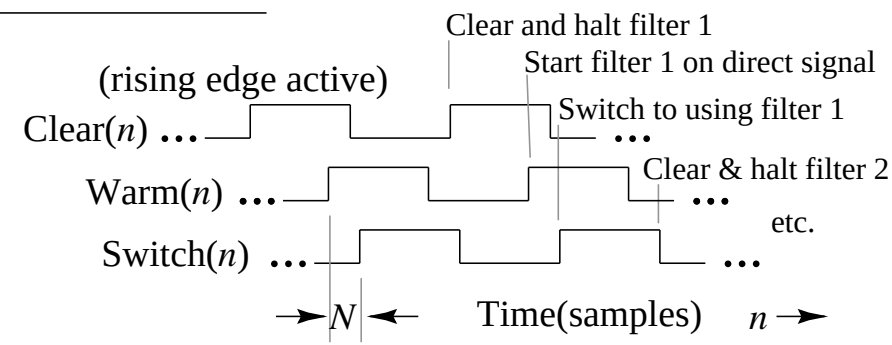

- Generates truncated exponentials or constants
- Filter complexity *on average* ≈ one pole
- Higher orders give truncated *polynomial* impulse responses

Overview
Early Voice Models
Digital Voice Models
Karplus Strong
Digital Waveguides
Single Reeds
Bowed Strings
Distortion Guitar
Commuted Synthesis
Digital Waveguide Mesh
Horn Filter Design
Finite Differences
Virtual Analog
Wave Digital Filters

Finite Differences

Overview
Early Voice Models
Digital Voice Models
Karplus Strong
Digital Waveguides
Single Reeds
Bowed Strings
Distortion Guitar
Commuted Synthesis
Digital Waveguide Mesh
Horn Filter Design
Finite Differences
- Ideal Mass
- Bilinear Transform
- Accuracy
- Observations
- Digital Filter Design
- Differentiator

Virtual Analog
Wave Digital Filters

Lumped Modeling Elements

- The foregoing models were *distributed-parameter systems*
- Distributed systems supporting *wave propagation*
- We also need *lumped-parameter systems*, such as for
  - Piano hammer
  - Brass-player's lips
  - Vocal-fold models
  - Reeds with mass
  - Helmholtz resonators
  - Circuit models
- Instead of *sampled traveling waves*, we employ *finite difference schemes* to model lumped systems

Overview
Early Voice Models
Digital Voice Models
Karplus Strong
Digital Waveguides
Single Reeds
Bowed Strings
Distortion Guitar
Commuted Synthesis
Digital Waveguide Mesh
Horn Filter Design
Finite Differences
- Ideal Mass
- Bilinear Transform
- Accuracy
- Observations
- Digital Filter Design
- Differentiator

Virtual Analog
Wave Digital Filters

Finite Difference Approximation (FDA)

Consider the simple differential equation relating velocity and force for an ideal mass:

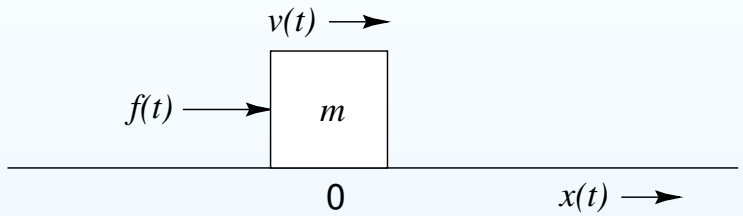

$$f(t) = m\frac{dv}{dt} \;\leftrightarrow\; F(s) = msV(s)$$

- Assume $f(t) =$ "input" signal, and $v(t) =$ "output".
- We need to *discretize* this continuous time equation.
- Input signal = $f_n \stackrel{\Delta}{=} f(nT)$, $n = 0, 1, 2, \ldots$, where T is the sampling interval.
- The FDS will compute v_n given f_n m for $n = 0, 1, 2, \ldots$.

Overview
Early Voice Models
Digital Voice Models
Karplus Strong
Digital Waveguides
Single Reeds
Bowed Strings
Distortion Guitar
Commuted Synthesis
Digital Waveguide Mesh
Horn Filter Design
Finite Differences
- Ideal Mass
- Bilinear Transform
- Accuracy
- Observations
- Digital Filter Design
- Differentiator

Virtual Analog
Wave Digital Filters

Finite Difference Approximation (Cont'd)

The *Finite Difference Approximation* replaces *differentiation* by a *finite difference*, e.g.,

$$\frac{dv}{dt} \approx \frac{v_n - v_{n-1}}{T} \qquad \text{("backward difference")}$$

$$\approx \frac{v_{n+1} - v_{n-1}}{2T} \qquad \text{("centered difference")}$$

Using the backwards-difference approximation, we obtain

$$v_n = v_{n-1} + \frac{T}{m} f_n, \quad n = 0, 1, 2, \ldots .$$

We see that v_{-1} must be specified as an initial condition.

Overview
Early Voice Models
Digital Voice Models
Karplus Strong
Digital Waveguides
Single Reeds
Bowed Strings
Distortion Guitar
Commuted Synthesis
Digital Waveguide Mesh
Horn Filter Design
Finite Differences
- Ideal Mass
- Bilinear Transform
- Accuracy
- Observations
- Digital Filter Design
- Differentiator

Virtual Analog
Wave Digital Filters

Bilinear Transform of the Ideal Mass

Starting with the driving point impedance

$$R(s) \triangleq \frac{F(s)}{V(s)} = ms$$

the bilinear transform gives the digital impedance

$$\frac{F_d(z)}{V_d(z)} \triangleq R_d(z) = R\left(c\frac{1-z^{-1}}{1+z^{-1}}\right) = mc\frac{1-z^{-1}}{1+z^{-1}}$$

Overview
Early Voice Models
Digital Voice Models
Karplus Strong
Digital Waveguides
Single Reeds
Bowed Strings
Distortion Guitar
Commuted Synthesis
Digital Waveguide Mesh
Horn Filter Design
Finite Differences
- Ideal Mass
- Bilinear Transform
- Accuracy
- Observations
- Digital Filter Design
- Differentiator

Virtual Analog
Wave Digital Filters

Bilinear Transform of the Ideal Mass, Cont'd

Multiplying out

$$F_d(z) + z^{-1}F_d(z) = mcV_d(z) - mcz^{-1}V_d(z)$$

and taking the inverse z transform gives

$$f_n + f_{n-1} = mc\left(v_n - v_{n-1}\right)$$

or

$$\boxed{v_n = v_{n-1} + \frac{1}{mc}\left(f_n + f_{n-1}\right)}$$

(The f_{n-1} term is new relative to the FDA.)
Equivalent to the *trapezoid rule* for numerical integration.

Overview
Early Voice Models
Digital Voice Models
Karplus Strong
Digital Waveguides
Single Reeds
Bowed Strings
Distortion Guitar
Commuted Synthesis
Digital Waveguide Mesh
Horn Filter Design
Finite Differences
- Ideal Mass
- Bilinear Transform
- Accuracy
- Observations
- Digital Filter Design
- Differentiator

Virtual Analog
Wave Digital Filters

Accuracy

Recall that the backward-difference approximation is first-order accurate in T:

$$\omega_a = \omega_d + \mathcal{O}(\omega_d^2 T)$$

For the trapezoid rule we get

$$\omega_a = \omega_d + \mathcal{O}(\omega_d^3 T^2)$$

- Trapezoid rule (bilinear transform) is *second-order* accurate in T.
- Higher order accuracy obtainable using more neighboring grid points.
- How should these extra grid points be brought in?

Overview
Early Voice Models
Digital Voice Models
Karplus Strong
Digital Waveguides
Single Reeds
Bowed Strings
Distortion Guitar
Commuted Synthesis
Digital Waveguide Mesh
Horn Filter Design
Finite Differences
- Ideal Mass
- Bilinear Transform
- Accuracy
- Observations
- Digital Filter Design
- Differentiator

Virtual Analog
Wave Digital Filters

Observations

- The FDA gave us

$$v_n = v_{n-1} + \frac{T}{m} f_n, \quad n = 0, 1, 2, \ldots$$

  which is a *one-pole digital filter* having a pole at $z = 1$ and a zero at $z = 0$.
- Similarly, the BLT gave us

$$v_n = v_{n-1} + \frac{T}{2m} (f_n + f_{n-1})$$

  which has the same pole, but a zero at $z = -1$.
- **Question:** *How do we use more poles and zeros to obtain a more accurate FDS?*

Overview
Early Voice Models
Digital Voice Models
Karplus Strong
Digital Waveguides
Single Reeds
Bowed Strings
Distortion Guitar
Commuted Synthesis
Digital Waveguide Mesh
Horn Filter Design
Finite Differences
- Ideal Mass
- Bilinear Transform
- Accuracy
- Observations
- Digital Filter Design
- Differentiator

Virtual Analog
Wave Digital Filters

Digital Filter Design Approach

The driving-point impedance $R(s) = ms$ of an ideal mass is an *ideal differentiator* (scaled by m):

$$R(j\omega) = mj\omega.$$

It is therefore natural to define the ideal *digital* differentiator as

$$H(e^{j\omega T}) = j\omega, \quad \omega T \in [-\pi, \pi)$$

Overview
Early Voice Models
Digital Voice Models
Karplus Strong
Digital Waveguides
Single Reeds
Bowed Strings
Distortion Guitar
Commuted Synthesis
Digital Waveguide Mesh
Horn Filter Design
Finite Differences
- Ideal Mass
- Bilinear Transform
- Accuracy
- Observations
- Digital Filter Design
- Differentiator

Virtual Analog
Wave Digital Filters

Frequency Response of the Ideal Digital Differentiator

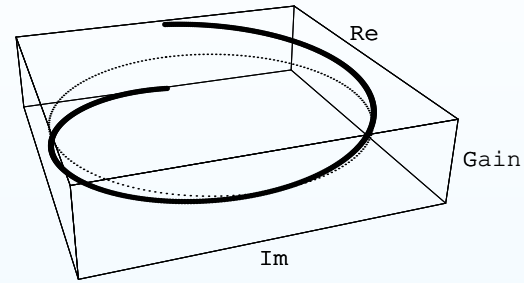

- An exact match is *not possible* with a *finite order* digital filter (note frequency-response discontinuity at $z = -1$)
- In practice, we minimize $\left\| H(e^{j\omega T}) - \hat{H}(e^{j\omega T}) \right\|$ where $\hat{H}$ is a *digital filter frequency response*
- We need some *oversampling* in order to have a *guard band* (e.g., from 20 kHz to 22 kHz)
- Desired response is *unconstrained* in the guard band

Overview
Early Voice Models
Digital Voice Models
Karplus Strong
Digital Waveguides
Single Reeds
Bowed Strings
Distortion Guitar
Commuted Synthesis
Digital Waveguide Mesh
Horn Filter Design
Finite Differences
Virtual Analog
Wave Digital Filters

Virtual Analog Synthesis

Overview
Early Voice Models
Digital Voice Models
Karplus Strong
Digital Waveguides
Single Reeds
Bowed Strings
Distortion Guitar
Commuted Synthesis
Digital Waveguide Mesh
Horn Filter Design
Finite Differences
Virtual Analog
- Virtual Analog
- Moog VCF Ladder
- VCF Structure
- Moog VCF Controls
- VCF Digitization
- BLT Bode
- BackDiff Bode
- BLT/BackDiff Hybrid
- Bode Plot

Virtual Analog Synthesis

Most “Virtual Analog” synthesizers try to emulate some version of the MiniMoog or MemoryMoog synthesizers, because of their popularity. These classic synths were designed by the analog-synth pioneer Robert Moog.

Moog VCF Ladder (1966)

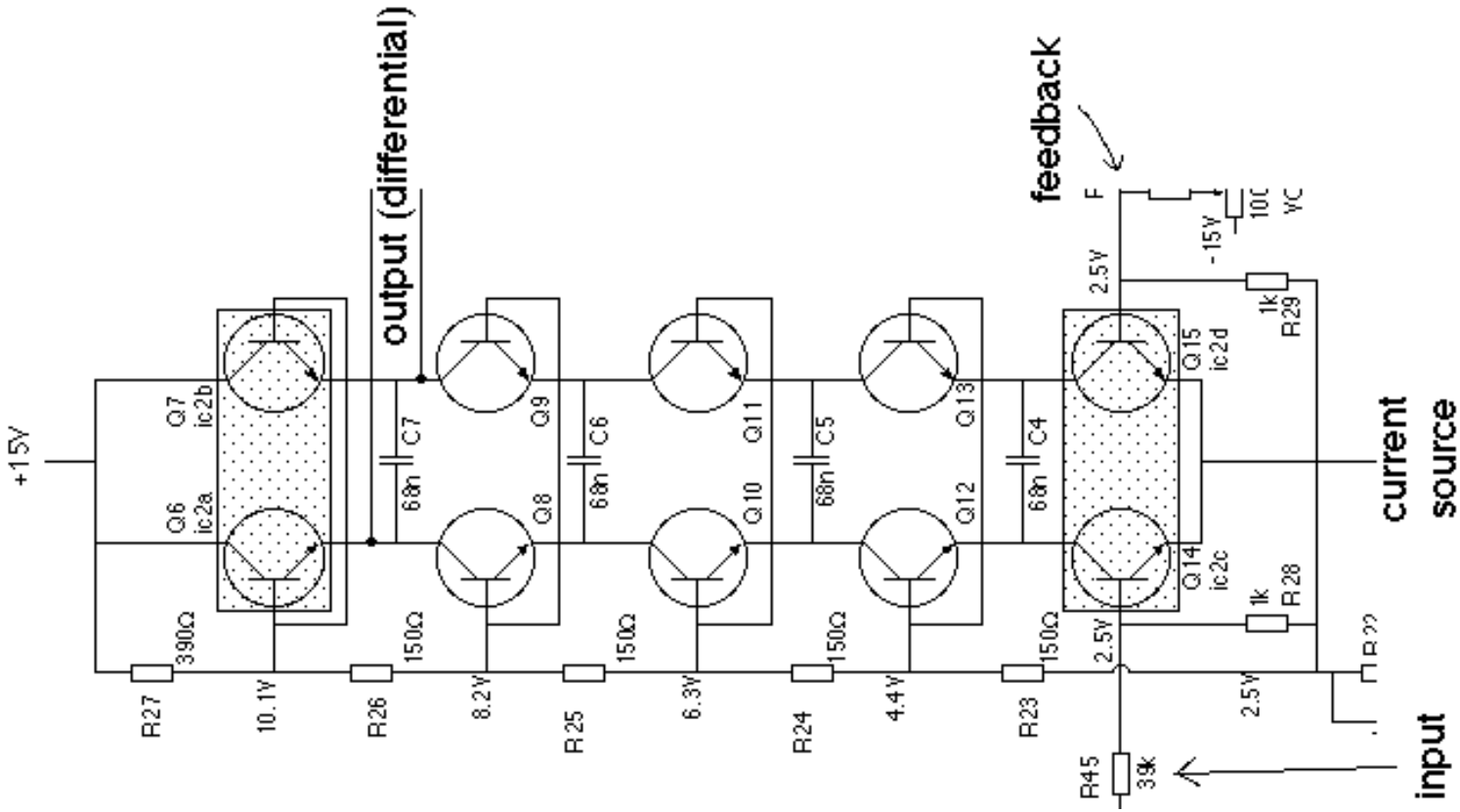

Overview
Early Voice Models
Digital Voice Models
Karplus Strong
Digital Waveguides
Single Reeds
Bowed Strings
Distortion Guitar
Commuted Synthesis
Digital Waveguide Mesh
Horn Filter Design
Finite Differences
Virtual Analog
- Virtual Analog
- Moog VCF Ladder
- VCF Structure
- Moog VCF Controls
- VCF Digitization
- BLT Bode
- BackDiff Bode
- BLT/BackDiff Hybrid
- Bode Plot

Moog VCF Structure

Structure: four identical series one-poles in a feedback loop:

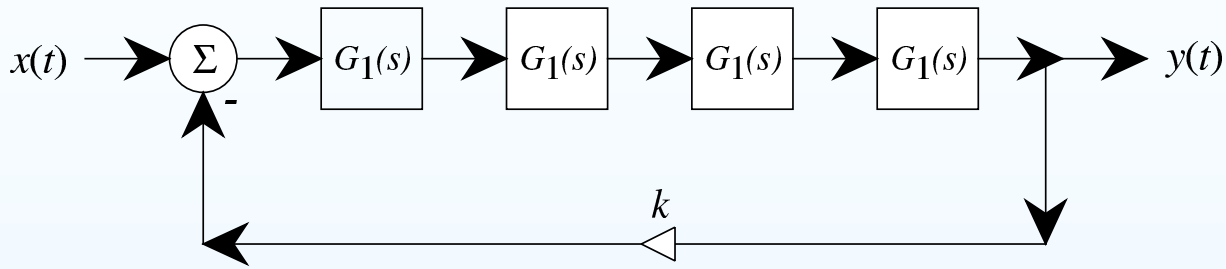

This implements a voltage-controllable four-pole filter:

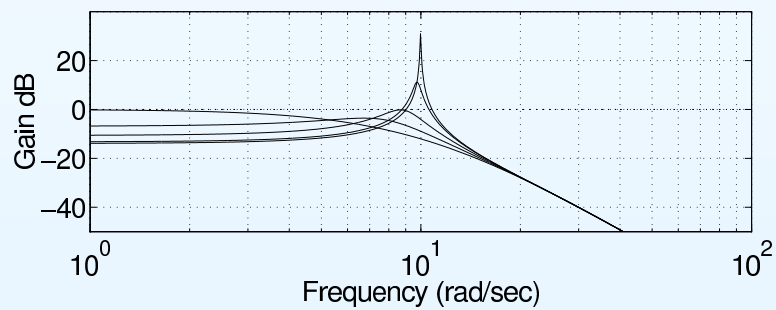

VCF Amplitude Response

Overview
Early Voice Models
Digital Voice Models
Karplus Strong
Digital Waveguides
Single Reeds
Bowed Strings
Distortion Guitar
Commuted Synthesis
Digital Waveguide Mesh
Horn Filter Design
Finite Differences
Virtual Analog
- Virtual Analog
- Moog VCF Ladder
- VCF Structure
- Moog VCF Controls
- VCF Digitization
- BLT Bode
- BackDiff Bode
- BLT/BackDiff Hybrid
- Bode Plot

Moog VCF Controls

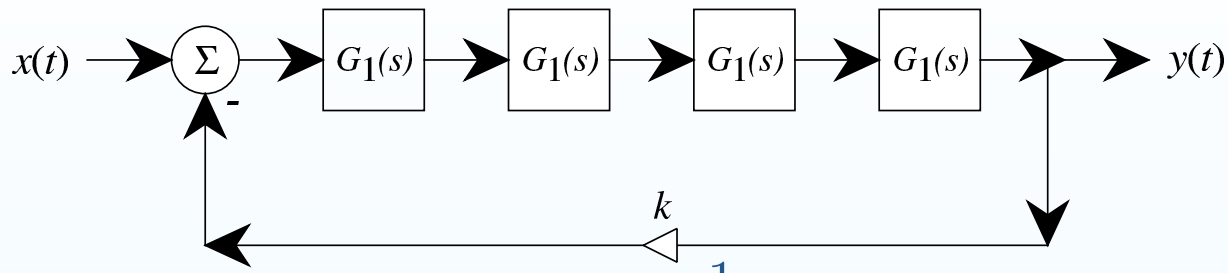

$$G_1(s) = \frac{1}{1 + s/\omega_c}$$

Controls

- Pole location $s = -\omega_c$: controls *cut-off frequency*
- Feedback gain k: controls *resonance*

Overview
Early Voice Models
Digital Voice Models
Karplus Strong
Digital Waveguides
Single Reeds
Bowed Strings
Distortion Guitar
Commuted Synthesis
Digital Waveguide Mesh
Horn Filter Design
Finite Differences
Virtual Analog
- Virtual Analog
- Moog VCF Ladder
- VCF Structure
- Moog VCF Controls
- VCF Digitization
- BLT Bode
- BackDiff Bode
- BLT/BackDiff Hybrid
- Bode Plot

Digitizing the Moog VCF

(Stilson-Smith ICMC-96)

Need to digitize $G_1(s) \to \hat{G}_1(z)$

- **Backward Difference:** $s = \dfrac{1 - z^{-1}}{T}$
- **Bilinear Transform:** $s = \dfrac{2}{T}\dfrac{1 - z^{-1}}{1 + z^{-1}}$

Problem: Delay-free loops
Solution: "Separation table" $k_Q(\omega_c)$
Reference: Tim Stilson's PhD/EE thesis
(June 2006, Stanford/CCRMA)

Overview
Early Voice Models
Digital Voice Models
Karplus Strong
Digital Waveguides
Single Reeds
Bowed Strings
Distortion Guitar
Commuted Synthesis
Digital Waveguide Mesh
Horn Filter Design
Finite Differences
Virtual Analog
- Virtual Analog
- Moog VCF Ladder
- VCF Structure
- Moog VCF Controls
- VCF Digitization
- BLT Bode
- BackDiff Bode
- BLT/BackDiff Hybrid
- Bode Plot

BLT Bode plot (medium Q)

Bilinear transform with separation table:

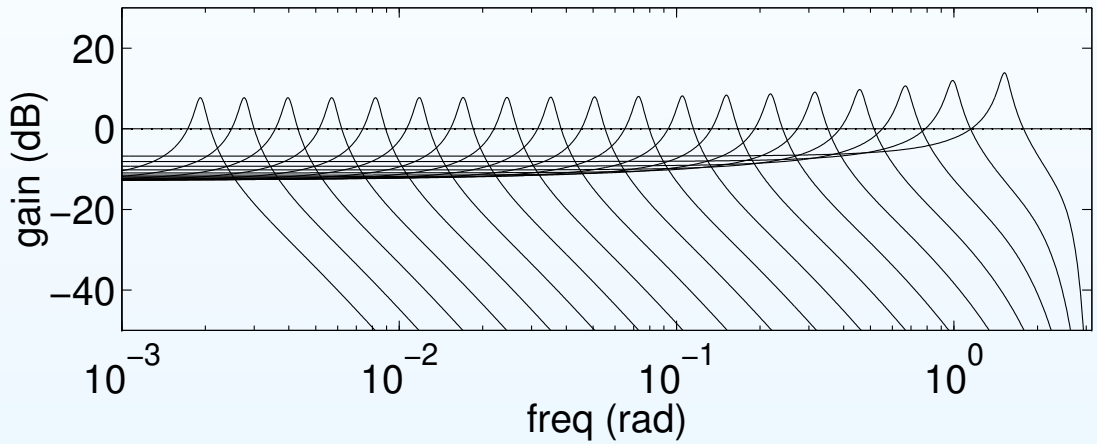

Overview
Early Voice Models
Digital Voice Models
Karplus Strong
Digital Waveguides
Single Reeds
Bowed Strings
Distortion Guitar
Commuted Synthesis
Digital Waveguide Mesh
Horn Filter Design
Finite Differences
Virtual Analog
- Virtual Analog
- Moog VCF Ladder
- VCF Structure
- Moog VCF Controls
- VCF Digitization
- BLT Bode
- BackDiff Bode
- BLT/BackDiff Hybrid
- Bode Plot

BackDiff Bode plot (medium Q)

Backwards difference, no separation table:

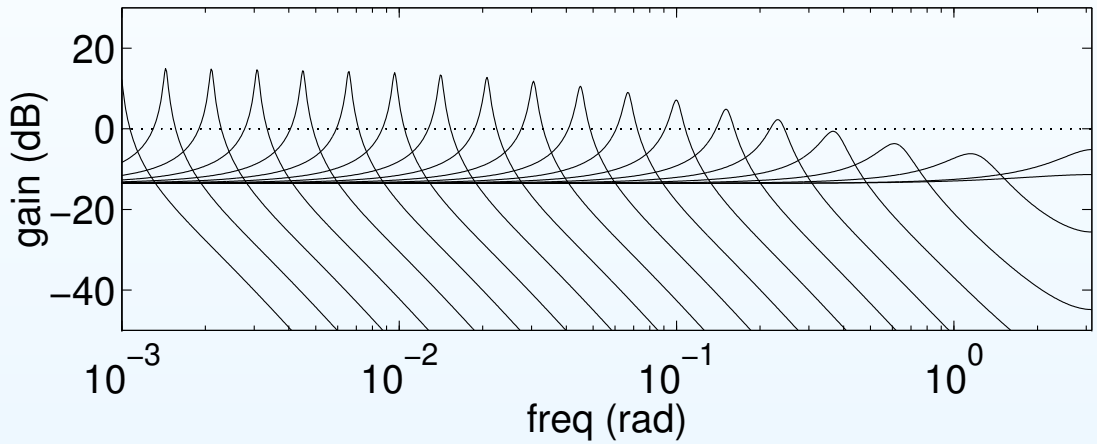

Overview
Early Voice Models
Digital Voice Models
Karplus Strong
Digital Waveguides
Single Reeds
Bowed Strings
Distortion Guitar
Commuted Synthesis
Digital Waveguide Mesh
Horn Filter Design
Finite Differences
Virtual Analog
- Virtual Analog
- Moog VCF Ladder
- VCF Structure
- Moog VCF Controls
- VCF Digitization
- BLT Bode
- BackDiff Bode
- BLT/BackDiff Hybrid
- Bode Plot

Discovery: BLT/BackDiff "Hybrid"

Note that

- backwards-difference yields zeros at $z = 0$
- bilinear transform yields zeros at $z = -1$

Try other locations... such as . . .

$$\boxed{\text{Zeros at } z = 0.3 \text{ (Stilson 1996)}}$$

Reference: Tim Stilson's June 2006 CCRMA thesis

Overview
Early Voice Models
Digital Voice Models
Karplus Strong
Digital Waveguides
Single Reeds
Bowed Strings
Distortion Guitar
Commuted Synthesis
Digital Waveguide Mesh
Horn Filter Design
Finite Differences
Virtual Analog
- Virtual Analog
- Moog VCF Ladder
- VCF Structure
- Moog VCF Controls
- VCF Digitization
- BLT Bode
- BackDiff Bode
- BLT/BackDiff Hybrid
- Bode Plot

Zeros at $z = 0.3$ — Bode Plot

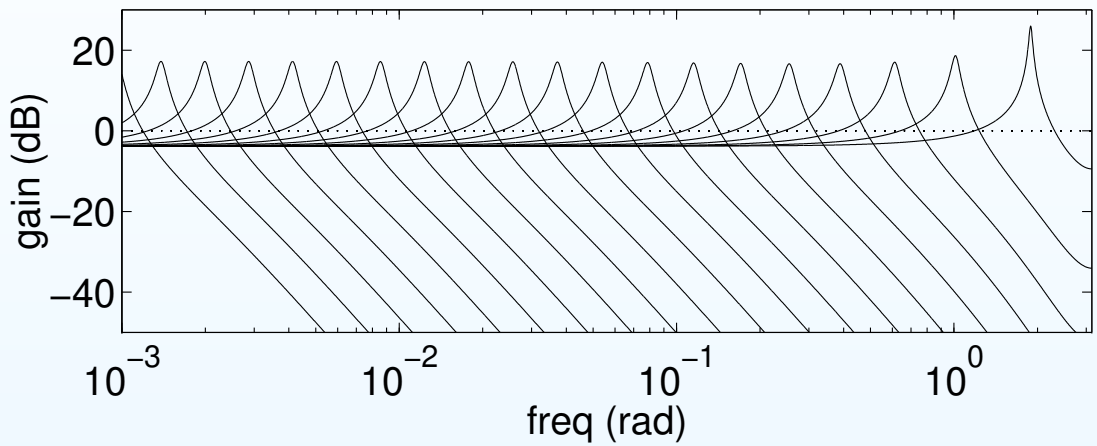

Overview
Early Voice Models
Digital Voice Models
Karplus Strong
Digital Waveguides
Single Reeds
Bowed Strings
Distortion Guitar
Commuted Synthesis
Digital Waveguide Mesh
Horn Filter Design
Finite Differences
Virtual Analog
Wave Digital Filters

Wave Digital Filters

Overview
Early Voice Models
Digital Voice Models
Karplus Strong
Digital Waveguides
Single Reeds
Bowed Strings
Distortion Guitar
Commuted Synthesis
Digital Waveguide Mesh
Horn Filter Design
Finite Differences
Virtual Analog
Wave Digital Filters
- Wave Digital Filters
- Wave Digital Filter Construction
- Physical Construction of Traveling-Wave Element Interfaces
- Points to Note
- Element Reflectance
- Reflectance of an Ideal Mass
- Simplifying the

Wave Digital Filters

A *Wave digital filter* (WDF) is a particular kind of *digital filter* (or finite difference scheme) based on physical modeling principles.

- Developed to digitize lumped *electrical* circuit elements:
  - inductors
  - capacitors
  - resistors
  - gyrators, circulators, etc., (classical circuit theory)
- Each element is digitized by the *bilinear transform*
- *Wave variables* are used in place of physical variables (new), yielding superior numerical properties.
- Element connections involve *wave scattering*

Overview
Early Voice Models
Digital Voice Models
Karplus Strong
Digital Waveguides
Single Reeds
Bowed Strings
Distortion Guitar
Commuted Synthesis
Digital Waveguide Mesh
Horn Filter Design
Finite Differences
Virtual Analog
Wave Digital Filters
- Wave Digital Filters
- Wave Digital Filter Construction
- Physical Construction of Traveling-Wave Element Interfaces
- Points to Note
- Element Reflectance
- Reflectance of an Ideal Mass
- Simplifying the

Wave Digital Filter Construction

Wave digital elements may be derived as follows:

1. Express forces and velocities as *sums of traveling-wave components* (*"wave variables"*):

$$\begin{aligned} f(t) &= f^+(t) + f^-(t) \\ v(t) &= v^+(t) + v^-(t) \end{aligned}$$

   The actual "travel time" is always *zero*.
2. Digitize via the *bilinear transform* (trapezoid rule)
3. Use *scattering junctions* ("*adaptors*") to connect elements together in series and/or parallel.

Overview
Early Voice Models
Digital Voice Models
Karplus Strong
Digital Waveguides
Single Reeds
Bowed Strings
Distortion Guitar
Commuted Synthesis
Digital Waveguide Mesh
Horn Filter Design
Finite Differences
Virtual Analog
Wave Digital Filters
- Wave Digital Filters
- Wave Digital Filter Construction
- Physical Construction of Traveling-Wave Element Interfaces
- Points to Note
- Element Reflectance
- Reflectance of an Ideal Mass
- Simplifying the

Physical Construction of Traveling-Wave Element Interfaces

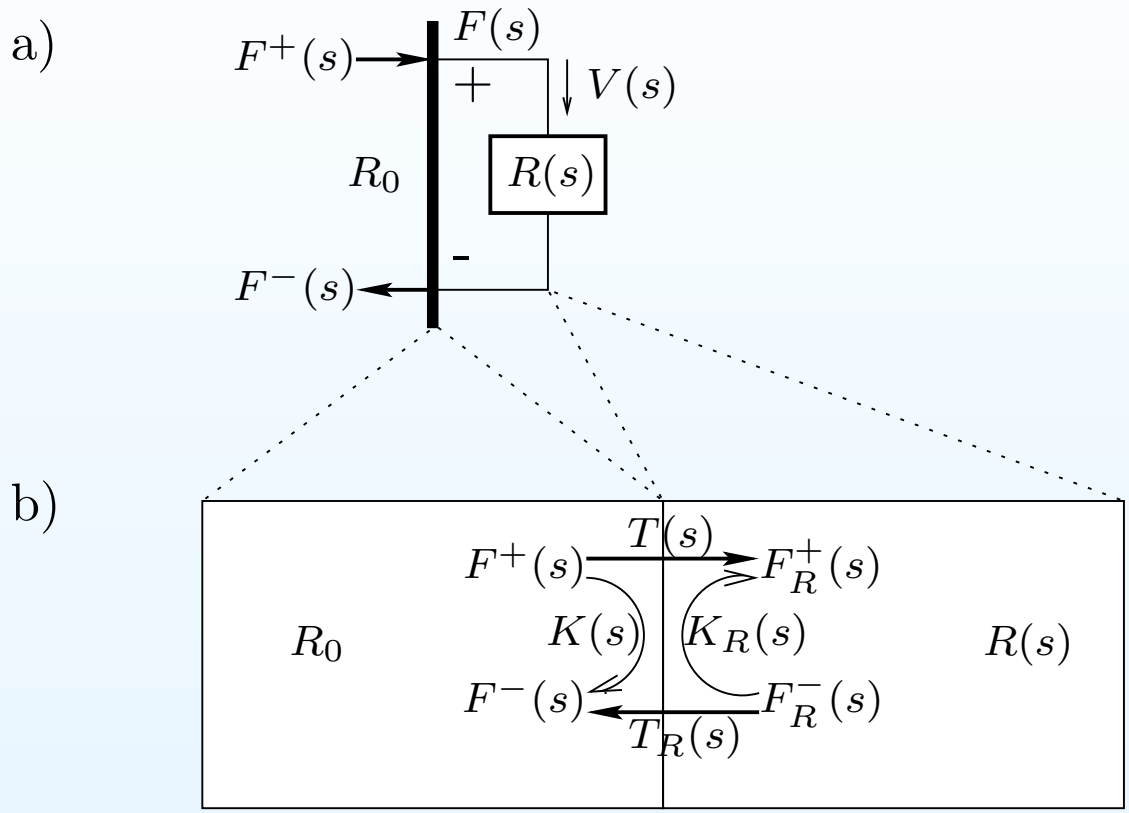

Overview
Early Voice Models
Digital Voice Models
Karplus Strong
Digital Waveguides
Single Reeds
Bowed Strings
Distortion Guitar
Commuted Synthesis
Digital Waveguide Mesh
Horn Filter Design
Finite Differences
Virtual Analog
Wave Digital Filters
- Wave Digital Filters
- Wave Digital Filter Construction
- Physical Construction of Traveling-Wave Element Interfaces
- Points to Note
- Element Reflectance
- Reflectance of an Ideal Mass
- Simplifying the

Points to Note

- The inserted waveguide impedance R_0 is *arbitrary* because it was *physically introduced*.
- The element now interfaces to other elements by abutting its waveguide (transmission line) to that of other element(s).
- Such junctions involve *lossless wave scattering*:

$$\begin{aligned} F_R^+(s) &= T(s)F^+(s) + K_R(s)F_R^-(s) \\ F^-(s) &= T_R(s)F_R^-(s) + K(s)F^+(s) \end{aligned}$$

Overview
Early Voice Models
Digital Voice Models
Karplus Strong
Digital Waveguides
Single Reeds
Bowed Strings
Distortion Guitar
Commuted Synthesis
Digital Waveguide Mesh
Horn Filter Design
Finite Differences
Virtual Analog
Wave Digital Filters
- Wave Digital Filters
- Wave Digital Filter Construction
- Physical Construction of Traveling-Wave Element Interfaces
- Points to Note
- Element Reflectance
- Reflectance of an Ideal Mass
- Simplifying the

Element Reflectance

Imposing *physical continuity constraints* across the junction:

$$\begin{aligned} F(s) &= F_R(s) \\ 0 &= V(s) + V_R(s) \end{aligned}$$

with

$$\begin{aligned} F(s) &= F^+(s) + F^-(s) \\ F_R(s) &= F_R^+(s) + F_R^-(s) \\ V(s) &= V^+(s) + V^-(s) = \frac{F^+(s)}{R_0} - \frac{F^-(s)}{R_0} \\ V_R(s) &= V_R^+(s) + V_R^-(s) = \left[\frac{F_R^+(s)}{R(s)} - \frac{F_R^-(s)}{R(s)}\right] \end{aligned}$$

we obtain the *reflection transfer function* ("reflectance") of the element with impedance $R(s)$:

$$\boxed{\hat{\rho}_R(s) \triangleq \frac{F^-(s)}{F^+(s)} = \frac{R(s) - R_0}{R(s) + R_0}} \tag{1}$$

Overview
Early Voice Models
Digital Voice Models
Karplus Strong
Digital Waveguides
Single Reeds
Bowed Strings
Distortion Guitar
Commuted Synthesis
Digital Waveguide Mesh
Horn Filter Design
Finite Differences
Virtual Analog
Wave Digital Filters
- Wave Digital Filters
- Wave Digital Filter Construction
- Physical Construction of Traveling-Wave Element Interfaces
- Points to Note
- Element Reflectance
- Reflectance of an Ideal Mass
- Simplifying the

Reflectance of an Ideal Mass

For a mass of m kg, we get

$$\begin{aligned} R_m(s) &= ms \\ \Rightarrow \hat{\rho}_m(s) &= \frac{ms - R_0}{ms + R_0} \end{aligned}$$

The mass reflectance is a *stable first-order allpass filter* (as expected).

Overview
Early Voice Models
Digital Voice Models
Karplus Strong
Digital Waveguides
Single Reeds
Bowed Strings
Distortion Guitar
Commuted Synthesis
Digital Waveguide Mesh
Horn Filter Design
Finite Differences
Virtual Analog
Wave Digital Filters
- Wave Digital Filters
- Wave Digital Filter Construction
- Physical Construction of Traveling-Wave Element Interfaces
- Points to Note
- Element Reflectance
- Reflectance of an Ideal Mass
- Simplifying the

Simplifying the Reflectance

Since the impedance R_0 of the inserted waveguide is arbitrary, we may set it to

$$R_0 = m$$

to simplify the reflectance of the mass seen from the waveguide:

$$\hat{\rho}_m(s) = \frac{ms - m}{ms + m} = \frac{s - 1}{s + 1} \qquad \text{(when } R_0 = m\text{)}$$

A similar derivation for the *ideal spring* k gives

$$\hat{\rho}_k(s) = \frac{1 - s}{1 + s} = -\hat{\rho}_m(s) \qquad \text{(when } R_0 = k\text{)}$$

For a *dashpot* μ, setting $R_0 = \mu$ gives

$$\hat{\rho}_\mu(s) = 0 \qquad \text{(when } R_0 = \mu\text{)}$$

Overview
Early Voice Models
Digital Voice Models
Karplus Strong
Digital Waveguides
Single Reeds
Bowed Strings
Distortion Guitar
Commuted Synthesis
Digital Waveguide Mesh
Horn Filter Design
Finite Differences
Virtual Analog
Wave Digital Filters
- Wave Digital Filters
- Wave Digital Filter Construction
- Physical Construction of Traveling-Wave Element Interfaces
- Points to Note
- Element Reflectance
- Reflectance of an Ideal Mass
- Simplifying the

Bilinear Transformation

To digitize via the bilinear transform, we make the substitution

$$s = c\frac{1 - z^{-1}}{1 + z^{-1}}$$

where $c > 0$ is arbitrary (usually $c = 2/T$).
Solving for z^{-1} gives the inverse bilinear transform:

$$z^{-1} = \frac{1 - s/c}{1 + s/c}$$

Setting $c = 1$ gives a particularly simple formula:

$$z^{-1} = \frac{1 - s}{1 + s} = \hat{\rho}_k(s) = -\hat{\rho}_m(s)$$

Overview
Early Voice Models
Digital Voice Models
Karplus Strong
Digital Waveguides
Single Reeds
Bowed Strings
Distortion Guitar
Commuted Synthesis
Digital Waveguide Mesh
Horn Filter Design
Finite Differences
Virtual Analog
Wave Digital Filters
- Wave Digital Filters
- Wave Digital Filter Construction
- Physical Construction of Traveling-Wave Element Interfaces
- Points to Note
- Element Reflectance
- Reflectance of an Ideal Mass
- Simplifying the

Resulting Wave Digital Elements

- Thus, under this choice of bilinear transform, we get extremely simple elementary reflectances:

$$\begin{aligned} \textit{ideal spring} &\rightarrow \textit{unit delay} \\ \textit{ideal mass} &\rightarrow \textit{unit delay and sign inversion} \\ \textit{ideal dashpot} &\rightarrow 0 \end{aligned}$$

- The element values remain only in the waveguide-interface impedances $R_0 = k, m, \mu$.
- Note that there is *no delay free path* through the digitized elements (important for modularity)

Overview
Early Voice Models
Digital Voice Models
Karplus Strong
Digital Waveguides
Single Reeds
Bowed Strings
Distortion Guitar
Commuted Synthesis
Digital Waveguide Mesh
Horn Filter Design
Finite Differences
Virtual Analog
Wave Digital Filters
- Wave Digital Filters
- Wave Digital Filter Construction
- Physical Construction of Traveling-Wave Element Interfaces
- Points to Note
- Element Reflectance
- Reflectance of an Ideal Mass
- Simplifying the

Wave Digital Elements

- "Wave digital mass" (interface impedance m)

$$\boxed{\tilde{\hat{\rho}}_m(z) = -z^{-1}}$$

- "Wave digital spring" (interface impedance k)

$$\boxed{\tilde{\hat{\rho}}_k(z) = z^{-1}}$$

- "Wave digital dashpot (interface impedance μ)

$$\boxed{\tilde{\hat{\rho}}(z) = 0}$$

where

$$\tilde{\hat{\rho}}_x(z) \triangleq \hat{\rho}_x\left(\frac{1-z^{-1}}{1+z^{-1}}\right)$$

These are the *digital reflectances* of the basic "circuit elements."

Overview
Early Voice Models
Digital Voice Models
Karplus Strong
Digital Waveguides
Single Reeds
Bowed Strings
Distortion Guitar
Commuted Synthesis
Digital Waveguide Mesh
Horn Filter Design
Finite Differences
Virtual Analog
Wave Digital Filters
- Wave Digital Filters
- Wave Digital Filter Construction
- Physical Construction of Traveling-Wave Element Interfaces
- Points to Note
- Element Reflectance
- Reflectance of an Ideal Mass
- Simplifying the

Wave Digital Mass Derivation

For an ideal mass m, we have the *driving point impedance*

$$R(s) = ms$$

which, when used to terminate a waveguide of impedance R_0, gives the reflectance

$$\hat{\rho}_m(s) = \frac{ms - R_0}{ms + R_0}$$

(continuous time, Laplace domain). Setting $R_0 = m$ gives

$$\hat{\rho}_m(s) = \frac{s - 1}{s + 1}$$

Overview
Early Voice Models
Digital Voice Models
Karplus Strong
Digital Waveguides
Single Reeds
Bowed Strings
Distortion Guitar
Commuted Synthesis
Digital Waveguide Mesh
Horn Filter Design
Finite Differences
Virtual Analog
Wave Digital Filters
- Wave Digital Filters
- Wave Digital Filter Construction
- Physical Construction of Traveling-Wave Element Interfaces
- Points to Note
- Element Reflectance
- Reflectance of an Ideal Mass
- Simplifying the

Digitizing the Mass Reflectance

Digitizing using the bilinear transform gives the digital reflectance

$$\tilde{\hat{\rho}}_m(z) \triangleq \hat{\rho}_m\left(\frac{1-z^{-1}}{1+z^{-1}}\right) = -z^{-1}$$

The corresponding *difference equation* is then simply

$$\boxed{f^-(n) = -f^+(n-1)}$$

(wave digital mass).

Overview
Early Voice Models
Digital Voice Models
Karplus Strong
Digital Waveguides
Single Reeds
Bowed Strings
Distortion Guitar
Commuted Synthesis
Digital Waveguide Mesh
Horn Filter Design
Finite Differences
Virtual Analog
Wave Digital Filters
- Wave Digital Filters
- Wave Digital Filter Construction
- Physical Construction of Traveling-Wave Element Interfaces
- Points to Note
- Element Reflectance
- Reflectance of an Ideal Mass
- Simplifying the

Elementary Wave Flow Diagrams

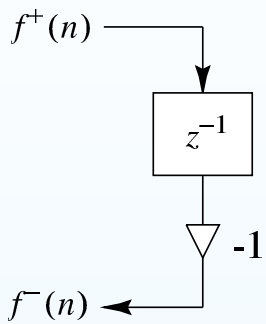

Wave digital mass

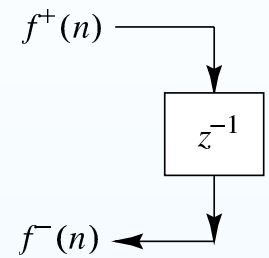

Wave digital spring

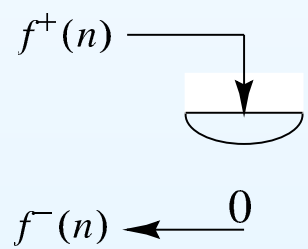

Wave digital dashpot

Overview
Early Voice Models
Digital Voice Models
Karplus Strong
Digital Waveguides
Single Reeds
Bowed Strings
Distortion Guitar
Commuted Synthesis
Digital Waveguide Mesh
Horn Filter Design
Finite Differences
Virtual Analog
Wave Digital Filters
- Wave Digital Filters
- Wave Digital Filter Construction
- Physical Construction of Traveling-Wave Element Interfaces
- Points to Note
- Element Reflectance
- Reflectance of an Ideal Mass
- Simplifying the

Example: "Piano hammer in flight"

Mass m at constant velocity:

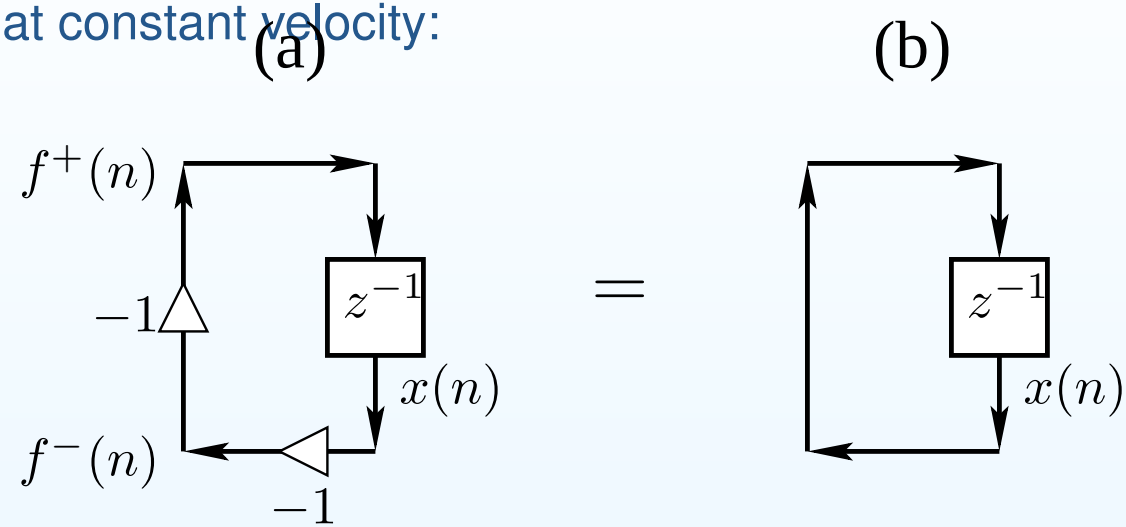

- State variable is in units of *force* ($x(n) \triangleq f^+(n-1)$)
- Physical force is $f(n) = f^+(n) + f^-(n) \equiv 0$
- Nonzero state variable $\Rightarrow$ nonzero mass *velocity*

Overview
Early Voice Models
Digital Voice Models
Karplus Strong
Digital Waveguides
Single Reeds
Bowed Strings
Distortion Guitar
Commuted Synthesis
Digital Waveguide Mesh
Horn Filter Design
Finite Differences
Virtual Analog
Wave Digital Filters
- Wave Digital Filters
- Wave Digital Filter Construction
- Physical Construction of Traveling-Wave Element Interfaces
- Points to Note
- Element Reflectance
- Reflectance of an Ideal Mass
- Simplifying the

Mass Velocity

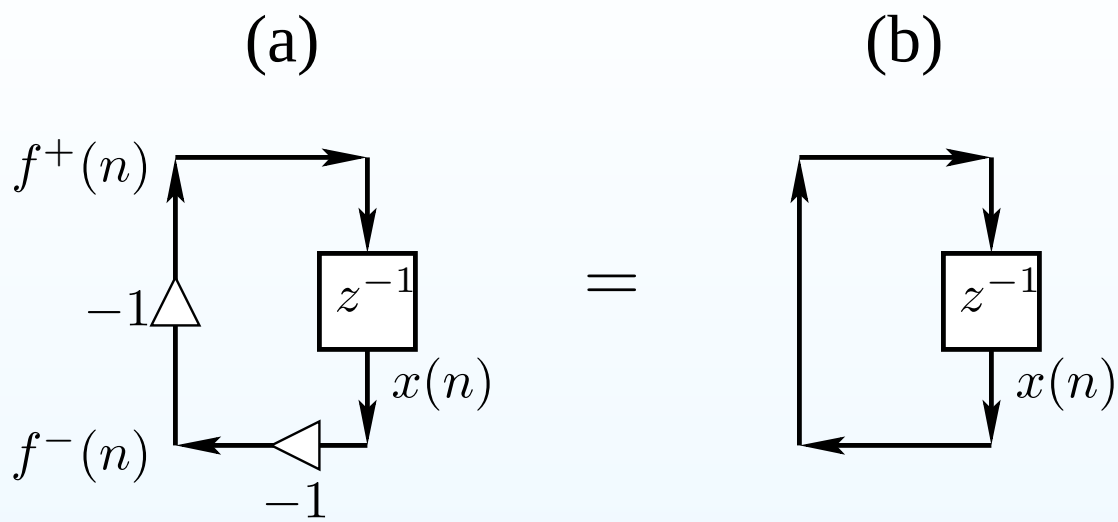

Force-wave simulations easily provide *velocity* outputs:

$$
\begin{aligned}
v(n) &= v^+(n) + v^-(n) = \frac{f^+(n)}{m} - \frac{f^-(n)}{m} \\
&= \frac{x(n)}{m} + \frac{x(n)}{m} = \frac{2}{m} x(n)
\end{aligned}
$$

Thus, the mass velocity is simply the state variable $x(n)$ scaled by $2/m$.

Spring and Free Mass

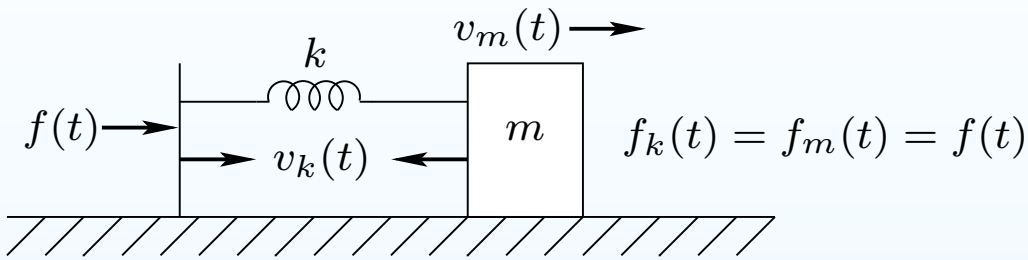

Physical Diagram

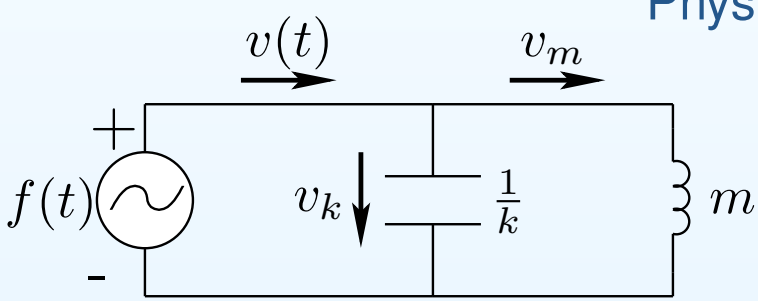

Electrical Equivalent Circuit

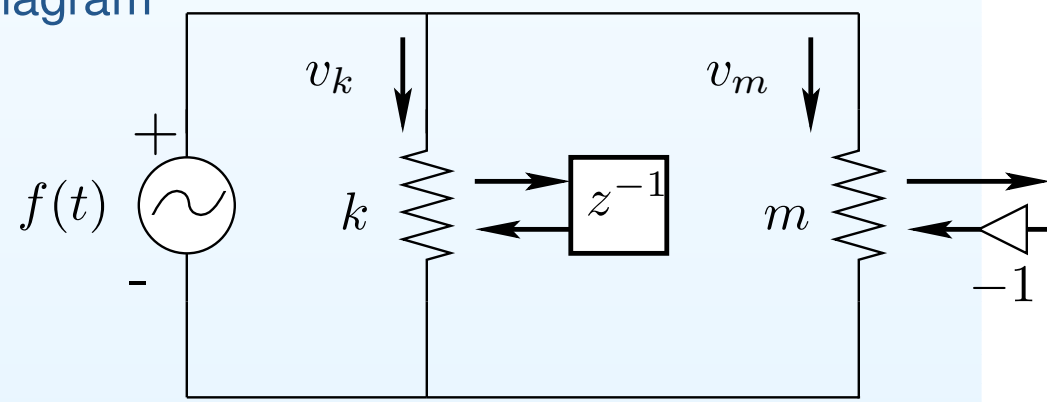

Digitization (BLT)

Three parallel branches $\Rightarrow$ *three-port parallel adaptor* needed

Overview
Early Voice Models
Digital Voice Models
Karplus Strong
Digital Waveguides
Single Reeds
Bowed Strings
Distortion Guitar
Commuted Synthesis
Digital Waveguide Mesh
Horn Filter Design
Finite Differences
Virtual Analog
Wave Digital Filters
- Wave Digital Filters
- Wave Digital Filter Construction
- Physical Construction of Traveling-Wave Element Interfaces
- Points to Note
- Element Reflectance
- Reflectance of an Ideal Mass
- Simplifying the

Wave Digital Mass-Spring Oscillator

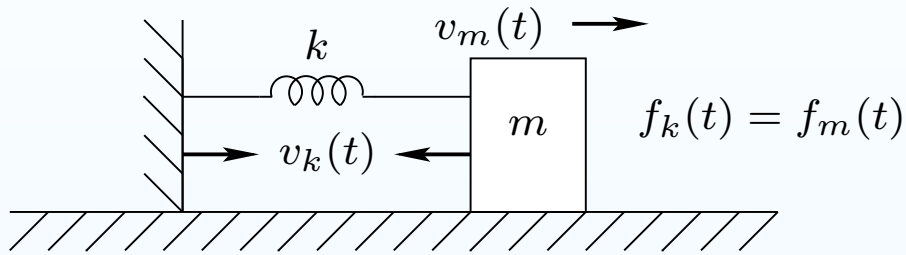

Physical Diagram

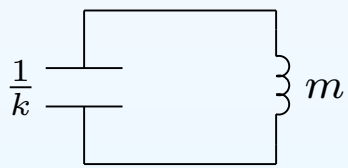

Electrical Equivalent Circuit

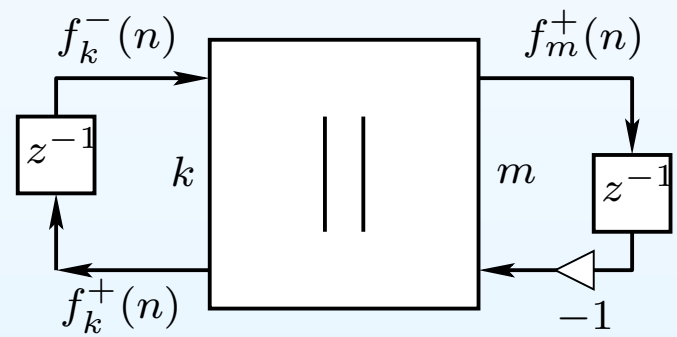

Scattering Junction

By flipping an element reference direction, we could realize also as a *series* connection.

Overview
Early Voice Models
Digital Voice Models
Karplus Strong
Digital Waveguides
Single Reeds
Bowed Strings
Distortion Guitar
Commuted Synthesis
Digital Waveguide Mesh
Horn Filter Design
Finite Differences
Virtual Analog
Wave Digital Filters
- Wave Digital Filters
- Wave Digital Filter Construction
- Physical Construction of Traveling-Wave Element Interfaces
- Points to Note
- Element Reflectance
- Reflectance of an Ideal Mass
- Simplifying the

Expanded Wave Digital Mass-Spring Oscillator

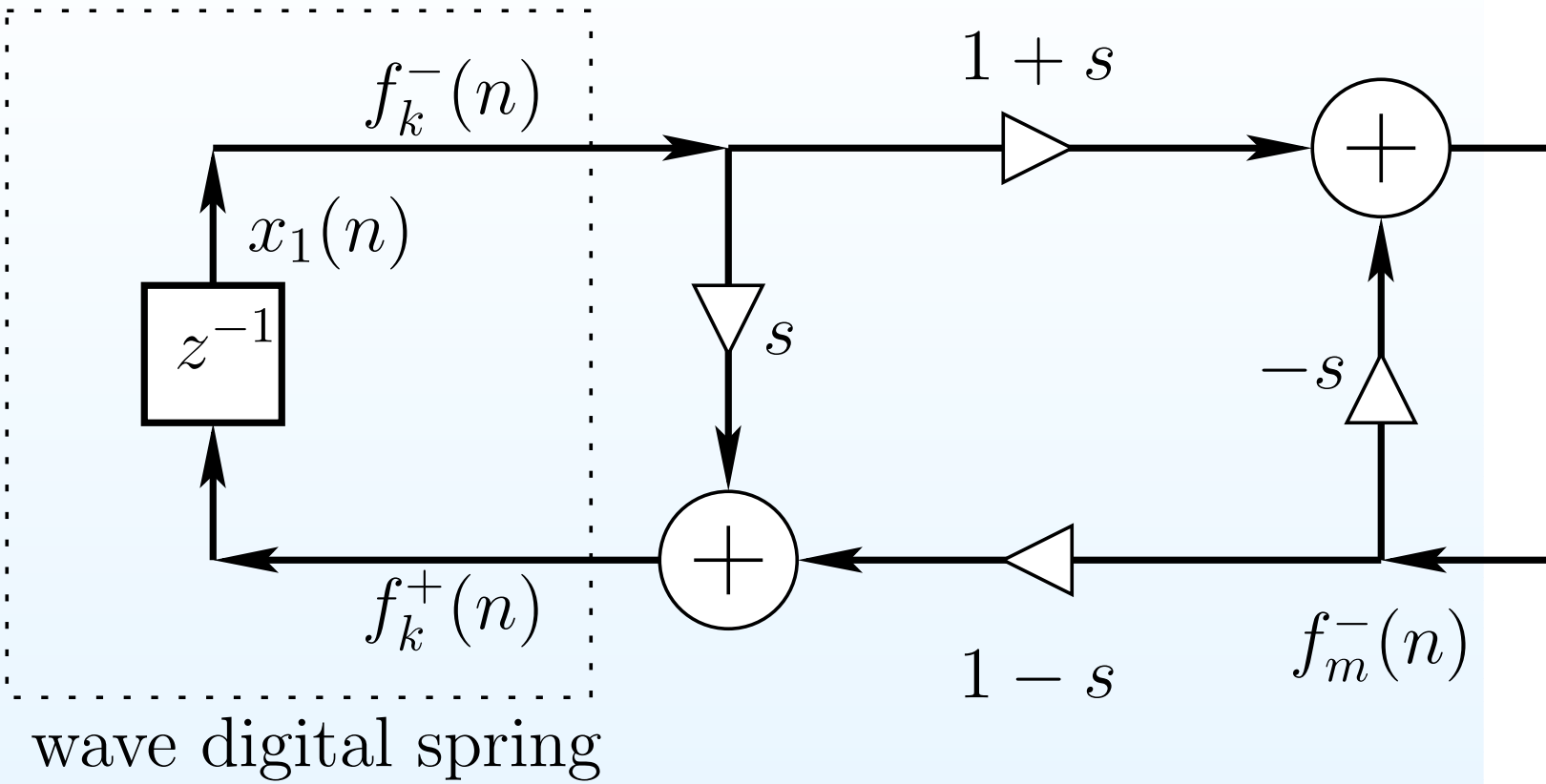

Wave variables to Physical Variables:

$$
\begin{aligned}
f_k(n) &= f_k^+(n) + f_k^-(n) && \text{(Spring Force)} \\
f_m(n) &= f_m^+(n) + f_m^-(n) && \text{(Mass Force)}
\end{aligned}
$$

Reflection coefficient:

$$\rho = \frac{m-k}{\ldots}$$

Overview
Early Voice Models
Digital Voice Models
Karplus Strong
Digital Waveguides
Single Reeds
Bowed Strings
Distortion Guitar
Commuted Synthesis
Digital Waveguide Mesh
Horn Filter Design
Finite Differences
Virtual Analog
Wave Digital Filters
Normalized Wave Digital Piano Hammer

Normalized Wave Digital Piano Hammer

Overview
Early Voice Models
Digital Voice Models
Karplus Strong
Digital Waveguides
Single Reeds
Bowed Strings
Distortion Guitar
Commuted Synthesis
Digital Waveguide Mesh
Horn Filter Design
Finite Differences
Virtual Analog
Wave Digital Filters
Normalized Wave Digital Piano Hammer
• Wave Digital Mass-Spring Oscillator
• Normalized Wave Scattering
• Normalized Wave Digital Mass-Spring Oscillator
• Transformer

Wave Digital Mass-Spring Oscillator

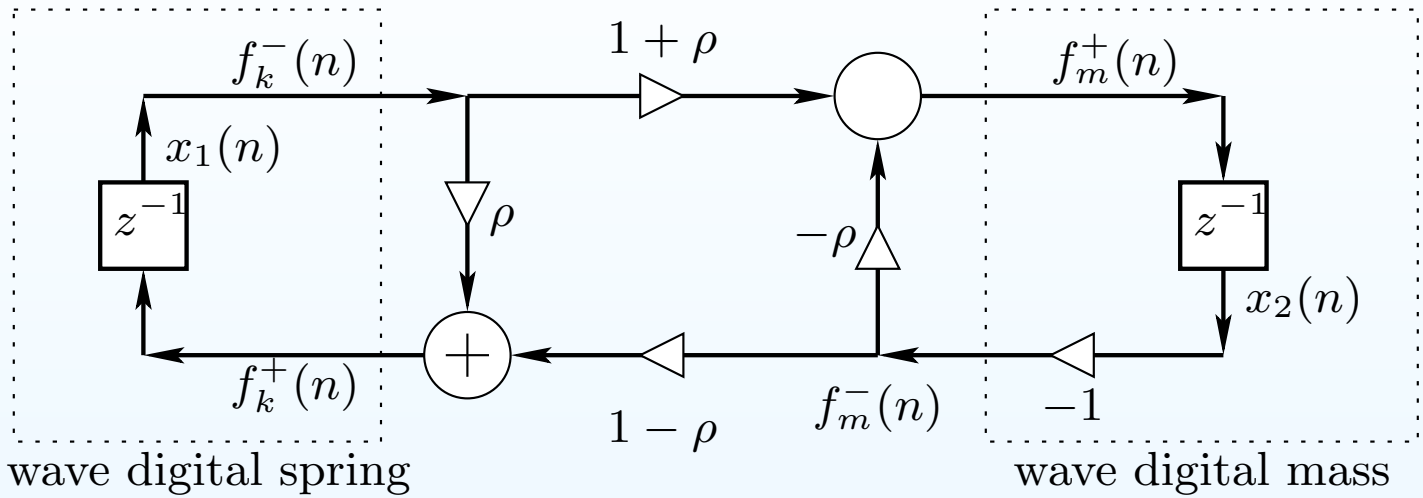

Overview
Early Voice Models
Digital Voice Models
Karplus Strong
Digital Waveguides
Single Reeds
Bowed Strings
Distortion Guitar
Commuted Synthesis
Digital Waveguide Mesh
Horn Filter Design
Finite Differences
Virtual Analog
Wave Digital Filters
Normalized Wave
Digital Piano Hammer
• Wave Digital
Mass-Spring Oscillator
• Normalized Wave
Scattering
• Normalized Wave
Digital Mass-Spring
Oscillator
• Transformer

Normalized Wave Scattering

Convert force waves to *root-power waves*:

$$\tilde{f}_i^+ \triangleq \frac{f_i^+}{\sqrt{R_i}}$$

$$\tilde{v}_i^+ \triangleq v_i^+ \cdot \sqrt{R_i}$$

where $R_i =$ wave impedance in waveguide i.

Overview
Early Voice Models
Digital Voice Models
Karplus Strong
Digital Waveguides
Single Reeds
Bowed Strings
Distortion Guitar
Commuted Synthesis
Digital Waveguide Mesh
Horn Filter Design
Finite Differences
Virtual Analog
Wave Digital Filters
Normalized Wave Digital Piano Hammer
- Wave Digital Mass-Spring Oscillator
- Normalized Wave Scattering
- Normalized Wave Digital Mass-Spring Oscillator
- Transformer

Normalized Wave Digital Mass-Spring Oscillator

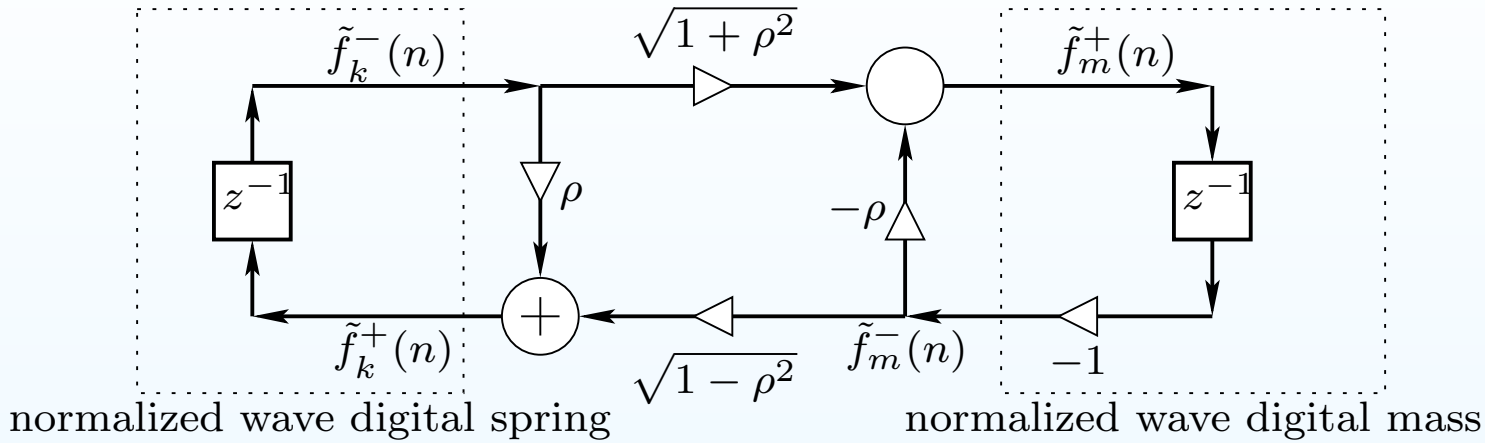

- Stored energy *invariant* with respect to *time varying* and/or *nonlinear* changes in mass or spring constants
- For the piano hammer, the felt spring constant may vary with force $f_k(n)$ without altering stored energy
- Only the reflection coefficient $\rho(n)$ varies as the spring is compressed
- Note delay-free interdependence of $\rho(n)$ and $f_k(n)$
- See Bensa & Bilbao et al. (SMAC-03) for an update on the *lossy* normalized wave digital piano hammer
- *Four multiplies*, *two additions* required in this form
- Using *transformer normalization*, we can obtain *three-multiply*, *three-add* variations (see Mathews-Smith SMAC-03 paper on

Overview
Early Voice Models
Digital Voice Models
Karplus Strong
Digital Waveguides
Single Reeds
Bowed Strings
Distortion Guitar
Commuted Synthesis
Digital Waveguide Mesh
Horn Filter Design
Finite Differences
Virtual Analog
Wave Digital Filters
Normalized Wave Digital Piano Hammer
• Wave Digital Mass-Spring Oscillator
• Normalized Wave Scattering
• Normalized Wave Digital Mass-Spring Oscillator
• Transformer

Transformer Normalized Wave Scattering

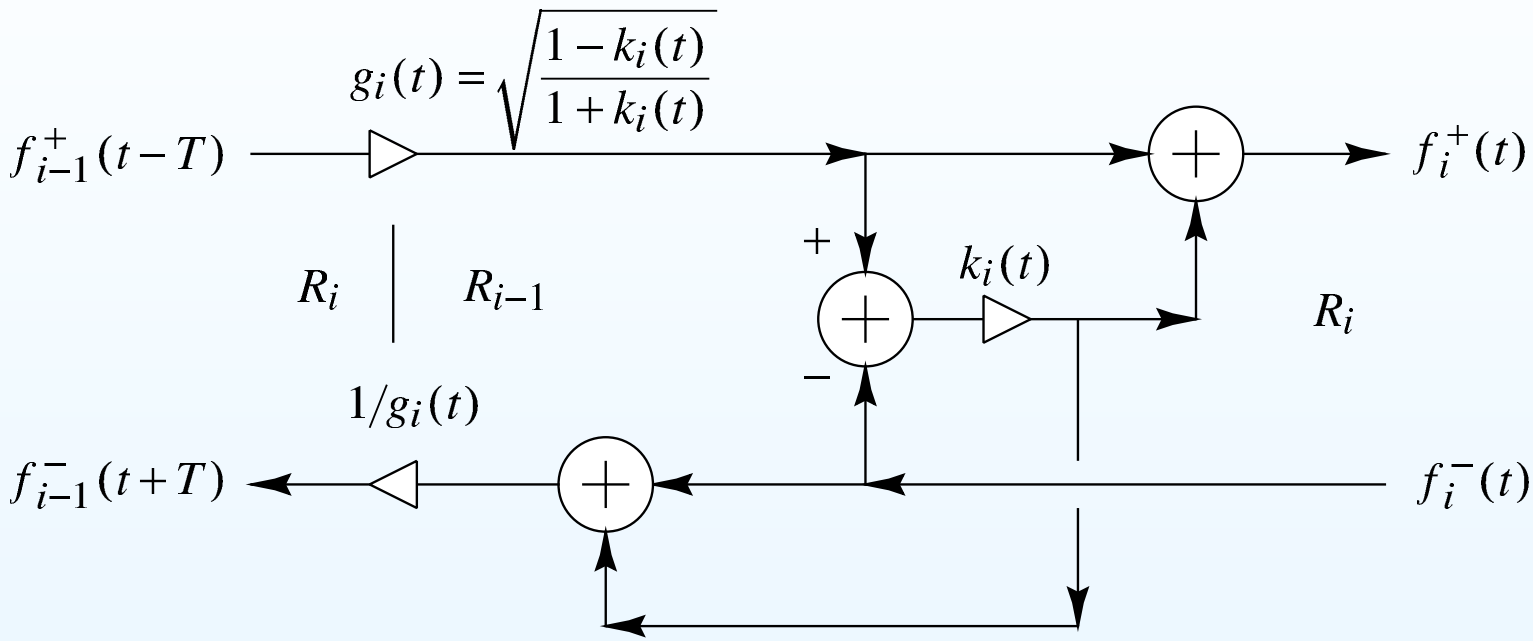

General transformer-normalized scattering junction

Overview
Early Voice Models
Digital Voice Models
Karplus Strong
Digital Waveguides
Single Reeds
Bowed Strings
Distortion Guitar
Commuted Synthesis
Digital Waveguide Mesh
Horn Filter Design
Finite Differences
Virtual Analog
Wave Digital Filters
Normalized Wave Digital Piano Hammer
● Wave Digital Mass-Spring Oscillator
● Normalized Wave Scattering
● Normalized Wave Digital Mass-Spring Oscillator
● Transformer

Normalized Waveguide Oscillator/Resonator

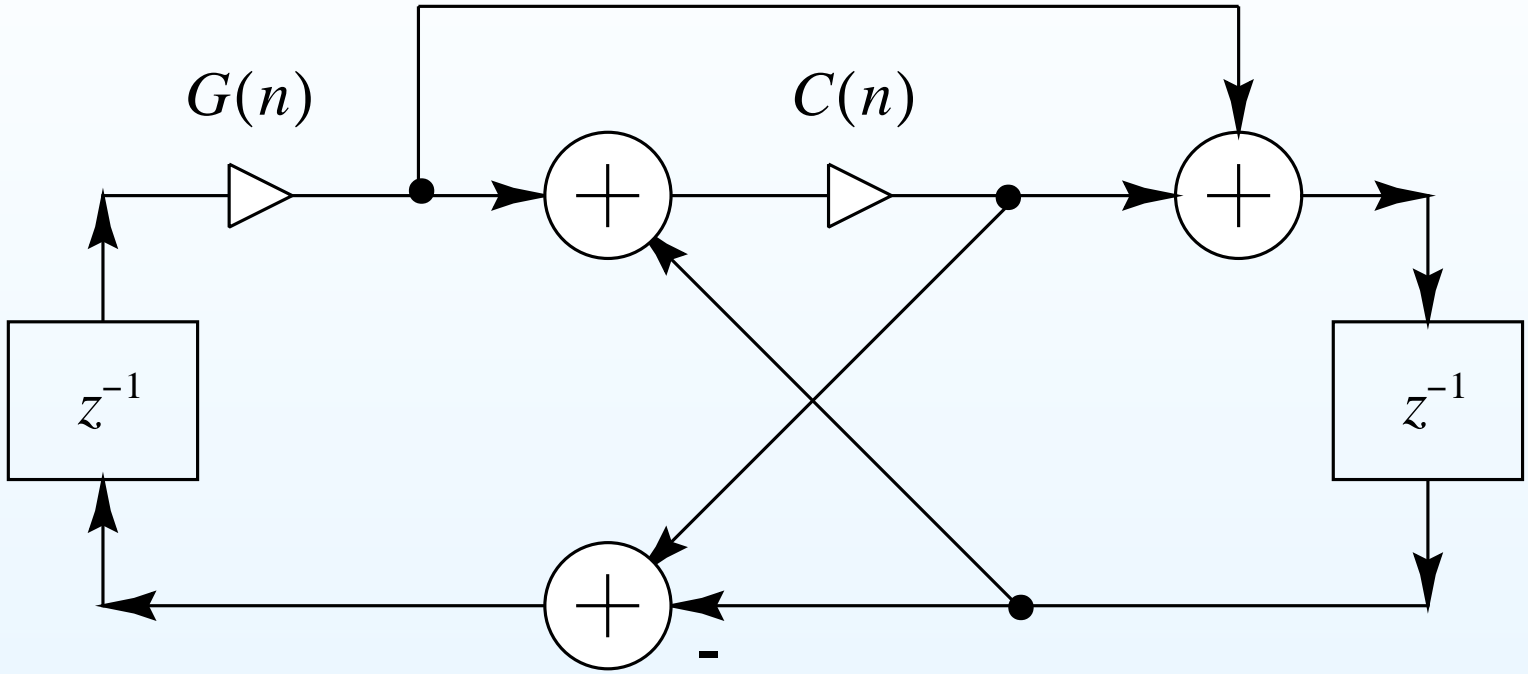

Overview
Early Voice Models
Digital Voice Models
Karplus Strong
Digital Waveguides
Single Reeds
Bowed Strings
Distortion Guitar
Commuted Synthesis
Digital Waveguide Mesh
Horn Filter Design
Finite Differences
Virtual Analog
Wave Digital Filters
Normalized Wave
Digital Piano Hammer
• Wave Digital
Mass-Spring Oscillator
• Normalized Wave
Scattering
• Normalized Wave
Digital Mass-Spring
Oscillator
• Transformer

Structural Losslessness - Two-Port Case

- All *one-multiply* scattering junctions are *structurally lossless*:
  - The *one multiply* can only affect *oscillation frequency*
- Not all normalized scattering junctions are structurally lossless
  - The four-multiply normalized junction has *two* parameters, $s \stackrel{\Delta}{=} \rho$ and $c \stackrel{\Delta}{=} \sqrt{1-\rho^2}$, which may not satisfy $s^2 + c^2 = 1$ *after quantization* to finite wordlengths

Overview
Early Voice Models
Digital Voice Models
Karplus Strong
Digital Waveguides
Single Reeds
Bowed Strings
Distortion Guitar
Commuted Synthesis
Digital Waveguide Mesh
Horn Filter Design
Finite Differences
Virtual Analog
Wave Digital Filters
Normalized Wave Digital Piano Hammer
• Wave Digital Mass-Spring Oscillator
• Normalized Wave Scattering
• Normalized Wave Digital Mass-Spring Oscillator
• Transformer

Passive Nonlinear Piano Hammer

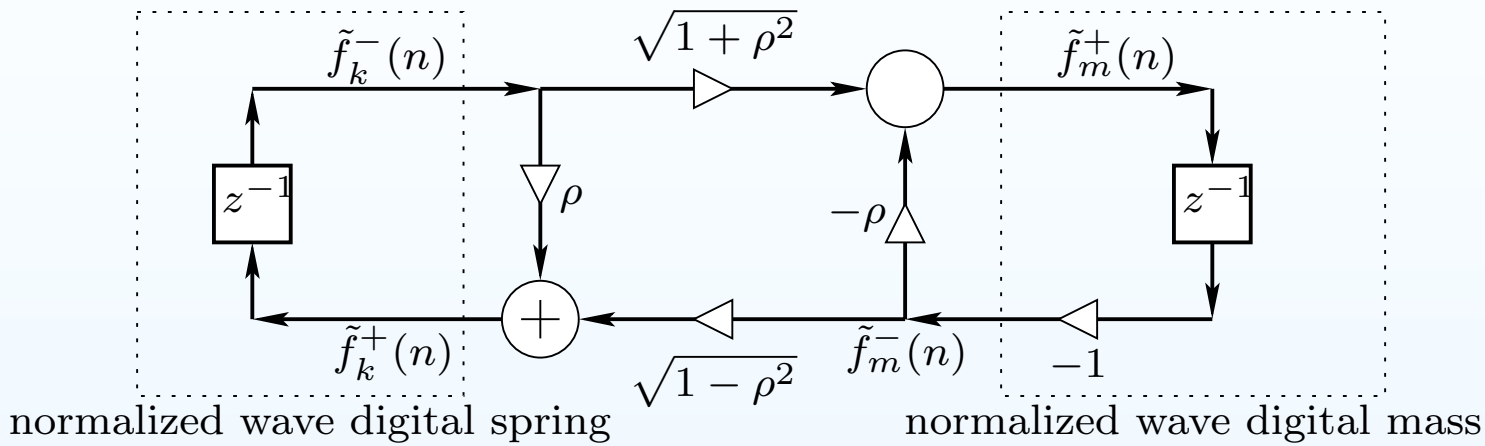

Overview
Early Voice Models
Digital Voice Models
Karplus Strong
Digital Waveguides
Single Reeds
Bowed Strings
Distortion Guitar
Commuted Synthesis
Digital Waveguide Mesh
Horn Filter Design
Finite Differences
Virtual Analog
Wave Digital Filters
Normalized Wave Digital Piano Hammer
• Wave Digital Mass-Spring Oscillator
• Normalized Wave Scattering
• Normalized Wave Digital Mass-Spring Oscillator
• Transformer

Passive Nonlinear Piano Hammer in Transformer Normalized Form

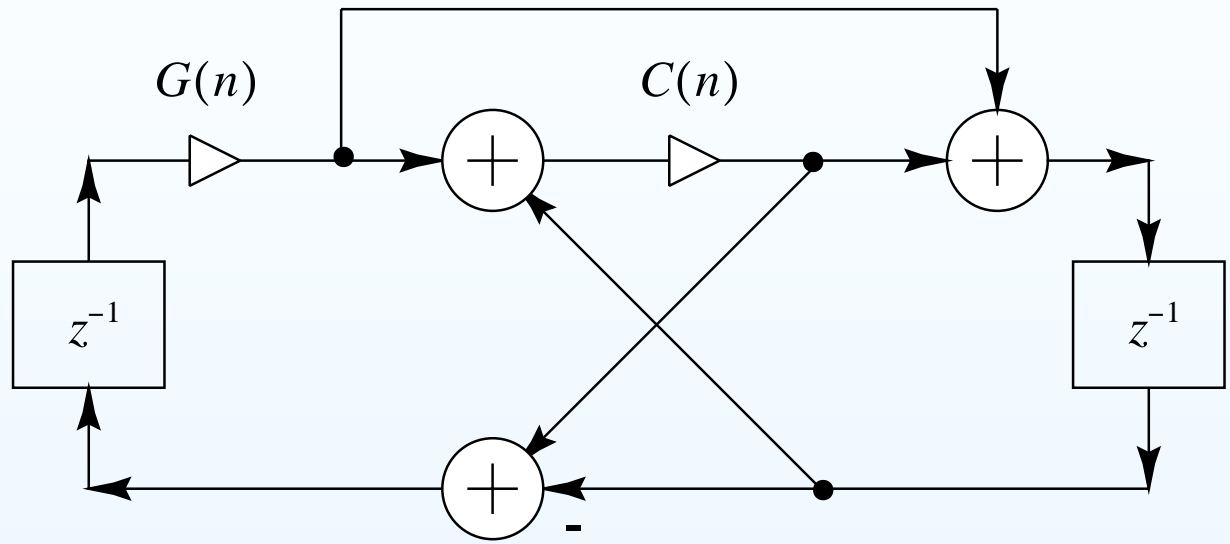

- Mass-spring oscillator is *structurally lossless* when damping is zero
- *Energy invariant* in the *non-linear* and *time-varying* cases by construction